Lighting Price List 2015 V1.0

Sets Kits LED Daylight Ballasts Tungsten Fluorescent Professional Lighting Accessories

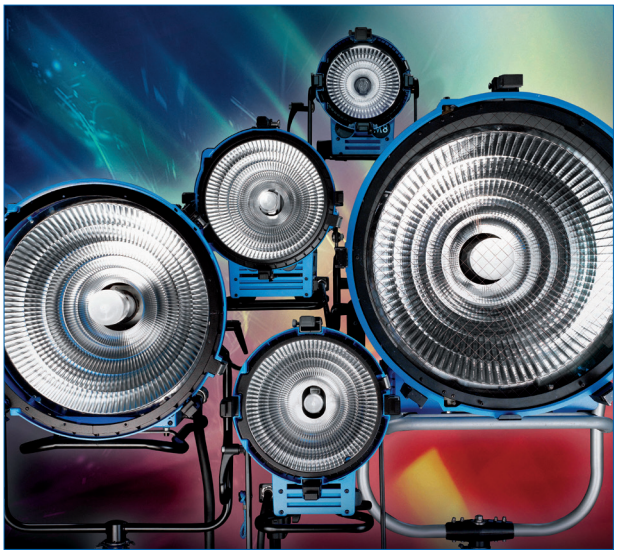







ABOUT ARRI

ARRI GROUP

With headquarters located in Munich, Germany, Arnold and Richter Cine Technik (ARRI) was founded in 1917 and is the world's largest manufacturer and distributor of motion picture camera, digital intermediate and lighting equipment. The ARRI Group comprises a global network of subsidiaries, agents and representatives that covers all aspects of the film industry: design, engineering, production, equipment rental, turnkey lighting solutions, post production, film and sound laboratory services, and visual effects. The Academy of Motion Picture Arts and Sciences has recognized ARRI's engineers and their technical contributions with 18 Scientific and Engineering Awards.



Award-winning Daylight technology, ARRIMAX® M-Series (Scientific and Engineering Award).



ARRI Lighting R&D and production facilities in Stephanskirchen near Rosenheim (Germany).

ARRI LIGHTING

ARRI's extensive range of lighting products offers an abundance of creative lighting solutions. ARRI lights are put to use across the world on feature film and TV productions, in TV studios, at major events, in theaters and for industrial applications. With more than 95 years manufacturing tradition in Southern Germany, ARRI products are renowned for quality and reliability. Since 1953 the luminaire production facility has been located in Stephanskirchen (Rosenheim) offering a total of 6,000 square meters of manufacturing floor space. Based on the variety of 200 active products, up to 50 thousand lamp heads are assembled and shipped on a yearly basis.

ARRI SYSTEM GROUP

As well as being a major manufacturer of lighting equipment, ARRI is also an expert in how this equipment can be put to best use. Our engineers and project leaders manage the execution of lighting solutions. The ARRI System Group is specialized in complex project work and can offer complete services for turnkey solutions of new installations or upgrades. The service options include technical and conceptual consulting, system planning and design, project management and controlling, logistics, installation, acceptance tests, training and customer service. Our clients are film and television studios, Theaters, event organizers, and industrial companies. With a world-wide network of system specialists ARRI is offering regional support from Berlin, Milan, Hong Kong, and Blauvelt (New York City area).



Green Studio turnkey solutions with innovative LED technology.

DISCLAIMER OF WARRANTY

All prices quoted in this price list are exclusive of any applicable value added tax, which the buyer shall be additionally liable to pay to the seller.

All prices are quoted FCA Stephanskirchen (Incoterms 2010). All costs incurred for packaging, loading, freight and customs will be charged separately.

All deliveries, services, offers and contracts are exclusively subject to our currently applicable General Sale And Delivery Terms & Conditions for Merchants. Refer to page 162 for further details.

Technical data, specifications, accessories, scope of delivery, prices and all other descriptions are subject to change without notice.

Photos presented may vary from actual products.

No Warranty. Changes in type and quantity, ability to deliver as well as errors and literal mistakes are reserved.

ARRI, ARRI ARRI, the ARRI Logo, ARRI X, POCKETPAR®, ARRILUX, ARRISUN®, T 12®, T 24®, EB®, EBB, ARRIMAX®, L-Series® und MAX Technology®, True Blue® are registered Trademarks of Arnold & Richter Cine Technik GmbH & Co. Betriebs KG.

© 2014 Arnold & Richter Cine Technik GmbH & Co. Betriebs KG. Reproduction and circulation in whole or in parts without prior permission is prohibited. All rights reserved.

Lighting Sales
Arnold & Richter Cine Technik GmbH & Co. Betriebs KG
Ernst-Augustin-Strasse 12
12489 Berlin
Germany

Phone: +49 30 - 67 82 33 0
Fax: +49 30 - 67 82 33 99
Mail: sales-lighting@arri.de
Web: www.arri.com

Technical Service
Arnold & Richter Cine Technik GmbH & Co. Betriebs KG
Pulvermühle
83071 Stephanskirchen
Germany

Phone: +49 8036 - 3009 3009
Fax: +49 8036 - 3009 3030
Mail: service-lighting@arri.de
Web: www.arri.com

TABLE OF CONTENTS

KITS 9



LED KITS

L5 / LoCaster LED Kit I NEW 10
L5 / LoCaster LED Kit II NEW 11
L5 LED Kit III NEW 12
ARRI LoCaster 2 Plus Kits 13



DAYLIGHT KITS

ARRILUX POCKETPAR® Kits 14



TUNGSTEN KITS

ARRILITE 750 Plus Kits 16
ARRILITE 2000 Plus Kits 18
Softbank I Plus Kit 19
Softbank IV Plus Kit 20
ARRI 650/3 Kit 21
ARRI 300/650 Fresnel Combo Kit 22

SETS 23



DAYLIGHT SETS

M-Series Sets 24
ARRISUN® Sets 26
Tageslicht Fresnel Sets 28

LED 31



L-SERIES®

L5 NEW 32
L7 34
36



CASTER-SERIES

Caster 2 Plus NEW 38

TABLE OF CONTENTS

DAYLIGHT 40



M-SERIES

M8 41
M18 43
M40 45
M90 47
ARRIMAX® 18/12 48

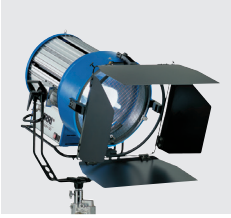

ARRISUN®

ARRISUN® 2 50
ARRISUN® 5 52
AS 18 54
AS 40 56
ARRISUN® 60 58
ARRISUN® 120 60



ARRISUN® 5 Event 62
ARRISUN® 18 Event 64



TRUE BLUE® D

True Blue® D5 66
True Blue® D12 68
True Blue® D25 70
True Blue® D40 72



COMPACT

COMPACT 200 74
COMPACT 6000 Plus 76
COMPACT 12000 Baby 78



DAYLIGHT FRESNEL

ARRI DAYLIGHT 18/12 80



COMPACT THEATER

COMPACT 2500 Theater 81
COMPACT 4000 Theater 83

TABLE OF CONTENTS

DAYLIGHT



ARRILUX

ARRILUX POCKETPAR® 125 85
ARRILUX POCKETPAR® 200 87
ARRILUX POCKETPAR® 400 89



ARRI X

ARRI X 5 91
ARRI X 12 93
ARRI X 40/25 95
ARRI X 60 97



ARRI X 40/25 Theater 99

BALLASTS 101



LOCATION BALLASTS

Electronic High Speed Ballasts 102
Electronic Location Ballasts 103
Electronic Lightweight Ballasts 104
Electronic Battery Ballasts 104
Electronic Booster Ballasts 104
Choke Ballasts 104



EVENT BALLASTS

Electronic Event Ballasts 105

TABLE OF CONTENTS

TUNGSTEN 106



ARRILITE PLUS

ARRILITE 750 Plus 107

ARRILITE 2000 Plus 109



ARRI FRESNEL

ARRI 150 111

ARRI 300 Plus 112

ARRI 650 Plus 114



TRUE BLUE® T

True Blue® T1 116

True Blue® T2 118

True Blue® T5 120



TRUE BLUE® ST

True Blue® ST1 122

True Blue® ST2/3 124

True Blue® ST5 126



TRUE BLUE® ST THEATER

True Blue® ST1/2 Theater 128

True Blue® ST5 Theater 129



STUDIO T

STUDIO T 12® 130

STUDIO T 24® 131



CYC/FLOODLIGHT

CYC FLOOD 133

TABLE OF CONTENTS

FLUORESCENT 135



STUDIO COOL

STUDIO COOL 2 136
STUDIO COOL 2+2 137
STUDIO COOL 4 138

PLA - PROFESSIONAL LIGHTING ACCESSORIES 139



Event Accessories & Adapters 140
Cables 141
Barndoors 143
Filter Frames 145
Spillrings, Frosted Glasses, Snoots 146
Accessory Holders, Speed Rings & Lightbanks 147
Conversion Filters & Protection Glasses 149
Lenses 150
Scrims & Bags 153
Lighting Stands, Wheels & Operating Poles 157
Grip Equipment 159
Motorization NEW 161

KITS

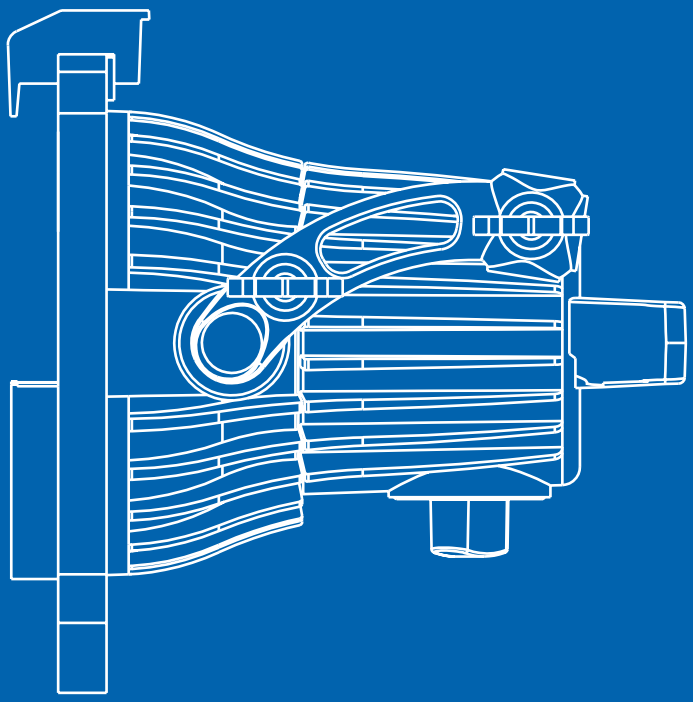

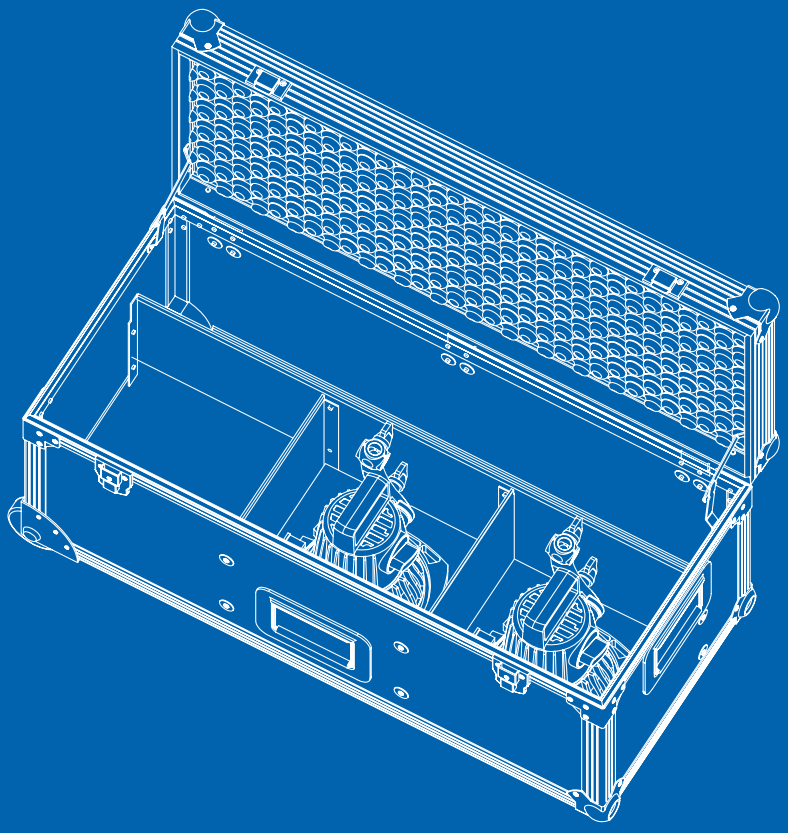

L5 / LOCASTER LED KIT I NEW



L5 / LOCASTER LED KIT I

Ident. No.	Description			Price / EURO
L0.0003692	**L5 / LoCaster LED Kit I** NEW		Schuko-Plug	4.852,00 €
	1 x L1.0001764	L5-C		
	2 x L1.0001329	LoCaster 2 Plus		
	1 x L2.0001486	Mains cable, 3 m, powerCON TRUE1 / Schuko, with line switch		
	1 x L2.79470.0	4-leaf barndoor (168 mm / 6.6")		
	1 x L2.79490.0	Filter Frame (168 mm / 6.6")		
	2 x L2.30089.0	Caster stirrup with battery pack attachment		
	2 x L2.30061.0	2-leaf barndoor for Caster, with gel frame slot		
	2 x L2.30059.0	Gel frame, fits Caster-Series 2-leaf barndoor		
	2 x L2.30083.0	Caster Series power supply (PowerDMX/Schuko) input: 100-240 V~, 50/60 Hz; output: 24 V⎓, 3 A		
	2 x L2.30081.0	PowerDMX extension cable (XLR 4 pin), 3 m		
	2 x L2.0003680	Baby Pin with 3/8" Threaded Stud		
	1 x L2.86272.0	Ceiling Scissor Clamp		
	3 x L2.76965.0	Compact ARRI Kit Stand LS.01 (050MKA)		
	1 x L2.0003679	Heavy Duty Case L5/Caster Kit		

L5 / LOCASTER LED KIT II NEW



L5 / LOCASTER LED KIT II

Ident. No.	Description			Price / EURO
L0.0003691	**L5 / LoCaster LED Kit II** NEW		Schuko-Plug	5.580,00 €
	2 x L1.0001764	L5-C		
	1 x L1.0001329	LoCaster 2 Plus		
	2 x L2.0001486	Mains cable, 3 m, powerCON TRUE1 / Schuko, with line switch		
	2 x L2.79470.0	4-leaf barndoor (168 mm / 6.6")		
	2 x L2.79490.0	Filter Frame (168 mm / 6.6")		
	1 x L2.30089.0	Caster stirrup with battery pack attachment		
	1 x L2.30061.0	2-leaf barndoor for Caster, with gel frame slot		
	1 x L2.30059.0	Gel frame, fits Caster-Series 2-leaf barndoor		
	1 x L2.30083.0	Caster Series power supply (PowerDMX/Schuko) input: 100-240 V~, 50/60 Hz; output: 24 V⎓, 3 A		
	1 x L2.30081.0	PowerDMX extension cable (XLR 4 pin), 3 m		
	1 x L2.0003680	Baby Pin with 3/8" Threaded Stud		
	1 x L2.86272.0	Ceiling Scissor Clamp		
	3 x L2.76965.0	Compact ARRI Kit Stand LS.01 (050MKA)		
	1 x L2.0003679	Heavy Duty Case L5/Caster Kit		

L5 LED KIT III NEW



L5 LED KIT III

Ident. No.	Description			Price / EURO
L0.0003690	**L5 LED Kit III** NEW		Schuko-Plug	4.372,00 €
	2 x L1.0001764	L5-C		
	2 x L2.0001486	Mains cable, 3 m, powerCON TRUE1 / Schuko, with line switch		
	2 x L2.79470.0	4-leaf barndoor (168 mm / 6.6")		
	2 x L2.79490.0	Filter Frame (168 mm / 6.6")		
	2 x L2.76965.0	Compact ARRI Kit Stand LS.01 (050MKA)		
	1 x L2.0003679	Heavy Duty Case L5/Caster Kit		

ARRI LoCaster 2 Plus KITS



ARRI LOCASTER 2 PLUS KITS

Ident. No.	Description			Price / EURO
L0.0002336	**LoCaster 2 Plus Kit**		Schuko-Plug	1.128,00 €
	1 x L1.0001329	LoCaster 2 Plus LED Panel with Onboard Control, 35 W, 11-36 V⎓		
	1 x L2.30083.0	Caster Series power supply (PowerDMX/Schuko) input: 100-240 V~, 50/60 Hz; output: 24 V⎓, 3 A		
	1 x L2.30081.0	PowerDMX extension cable (XLR 4 pin), 3 m		
	1 x L2.30089.0	Caster Stirrup with battery attachment		
	1 x L2.30099.0	Light case for 1 x Caster & accessories, empty		
L0.0002337	**LoCaster 2 Plus Kit with Barndoor and Filter Frame**		Schuko-Plug	1.206,00 €
	1 x L1.0001329	LoCaster 2 Plus LED Panel with Onboard Control, 35 W, 11-36 V⎓		
	1 x L2.30083.0	Caster Series power supply (PowerDMX/Schuko) input: 100-240 V~, 50/60 Hz; output: 24 V⎓, 3 A		
	1 x L2.30081.0	PowerDMX extension cable (XLR 4 pin), 3 m		
	1 x L2.30089.0	Caster stirrup with battery attachment		
	1 x L2.30061.0	2-leaf barndoor for Caster, with gel frame slot		
	1 x L2.30059.0	Gel frame, fits Caster-Series 2-leaf barndoor		
	1 x L2.30099.0	Light case for 1 x Caster & accessories, empty		

ARRILUX POCKETPAR® KITS






ARRILUX POCKETPAR® KITS

Ident. No.	Description			Price / EURO
L0.73375.0	**ARRILUX POCKETPAR® 125 Profi Kit**		Binder	3.448,00 €
	1 x L1.73375.0	POCKETPAR® 125		
	1 x L2.76013.B	EB® 125/200 ALF		
	1 x L2.73380.0	4-leaf barndoor, ARRILUX 125 (78 mm / 3.1")		
	1 x L2.73382.0	Head-to-Ballast cable 125 W, 7 m, Binder		
	1 x L2.73402.0	ARRILUX 125 narrow flood lens (78 mm / 3.1")		
	1 x L2.73404.0	ARRILUX 125 flood lens (78 mm / 3.1")		
	1 x L2.73462.0	ARRILUX 125 super flood lens (78 mm / 3.1")		
	1 x L2.73464.0	ARRILUX 125 super flood lens frosted (78 mm / 3.1")		
	1 x L2.73488.0	Conversion Filter 3/4 CTO, 5600 to 3200 K		
	1 x L2.73408.0	Handgrip 16 mm spigot size with threat 3/8"		
	1 x L2.73406.0	Adapter for handgrip (micro-yoke)		
	1 x L2.73407.0	Head/Ballast Adapter, metal		
	1 x L2.72927.0	Offset screwdriver size 4		
	1 x L2.73388.A	Case for ARRILUX 125 Kit (55 x 38 x 30 cm)		
L0.70790.C	**ARRILUX POCKETPAR® 200 Kit**		Amphenol	3.821,00 €
	1 x L1.70790.0	POCKETPAR® 200		
	1 x L2.76013.B	EB® 125/200 with ALF		
	1 x L2.79170.0	4-leaf barndoor (130 mm / 5.1")		
	1 x L2.73372.0	Head-to-Ballast cable 200 W, 7 m, Amphenol		
	1 x L2.70832.0	ARRILUX 200 narrow flood lens (112 mm / 4.4")		
	1 x L2.70833.0	ARRILUX 200 flood lens (112 mm / 4.4")		
	1 x L2.70834.0	ARRILUX 200 super flood lens (112 mm / 4.4")		
	1 x L2.70835.0	ARRILUX 200 super flood lens frosted (112 mm / 4.4")		
	1 x L2.77818.0	Lens bag for max. 5 lenses up to Ø 235 mm, empty		
	1 x L2.73408.0	Handgrip 16 mm spigot size with threat 3/8"		
	1 x L2.70839.0	Case for ARRILUX 200 Kit (58 x 28 x 39 cm)		

ARRILUX - POCKETPAR® KITS (CONTINUE)

L0.70790.E	**ARRILUX POCKETPAR® 200 Lighthouse Kit**		Amphenol	4.496,00	€
	1 x L1.70790.0	POCKETPAR® 200			
	1 x L2.76013.B	EB® 125/200 with ALF			
	1 x L2.79170.0	4-leaf barndoor (130 mm / 5.1")			
	1 x L2.73372.0	Head-to-Ballast cable 200 W, 7 m, Amphenol			
	1 x L2.70832.0	ARRILUX 200 narrow flood lens (112 mm / 4.4")			
	1 x L2.70833.0	ARRILUX 200 flood lens (112 mm / 4.4")			
	1 x L2.70834.0	ARRILUX 200 super flood lens (112 mm / 4.4")			
	1 x L2.70835.0	ARRILUX 200 super flood lens frosted (112 mm / 4.4")			
	1 x L2.77818.0	Lens bag for max. 5 lenses up to Ø 235 mm, empty			
	1 x L2.73408.0	Handgrip 16 mm spigot size with threat 3/8"			
	1 x L2.70825.0	Lighthouse 200, clear glass			
	1 x L2.70826.0	Shutter for lighthouse			
	1 x L2.70865.0	Stirrup for lighthouse			
	1 x L2.70838.0	Speed ring, complete with adapter			
	1 x L2.70839.0	Case for ARRILUX 200 Kit (58 x 28 x 39 cm)			
L0.70880.C	**ARRILUX POCKETPAR® 400 Kit**		Inter-	4.985,00	€
	1 x L1.70880.0	POCKETPAR® 400	national		
	1 x L2.76260.0	EB® 400/575 with ALF	(VEAM)		
	1 x L2.79470.0	4-leaf barndoor (168 mm / 6.6")			
	1 x L2.70857.0	Head-to-Ballast cable 400 W, 7 m, International (VEAM)			
	1 x L2.77826.0	DROP-IN lens, spot, blue (130 mm / 5.1")			
	1 x L2.77828.0	DROP-IN lens, narrow flood (130 mm / 5.1")			
	1 x L2.77830.0	DROP-IN lens, flood (130 mm / 5.1")			
	1 x L2.77832.0	DROP-IN lens, super flood (130 mm / 5.1")			
	1 x L2.77834.0	DROP-IN lens, super flood frosted (130 mm / 5.1")			
	1 x L2.77818.0	Lens bag for max. 5 lenses up to Ø 235 mm, empty			
	1 x L2.73408.0	Handgrip 16 mm spigot size with threat 3/8"			
	1 x L2.70903.0	Case for ARRILUX 400 Kit (71 x 41 x 32 cm)			
L0.70880.E	**ARRILUX POCKETPAR® 400 Lighthouse Kit**		Inter-	5.895,00	€
	1 x L1.70880.0	POCKETPAR® 400	national		
	1 x L2.76260.0	EB® 400/575 with ALF	(VEAM)		
	1 x L2.79470.0	4-leaf barndoor (168 mm / 6.6")			
	1 x L2.70857.0	Head-to-Ballast cable 400 W, 7 m, VEAM			
	1 x L2.77826.0	DROP-IN lens, spot, blue (130 mm / 5.1")			
	1 x L2.77828.0	DROP-IN lens, narrow flood (130 mm / 5.1")			
	1 x L2.77830.0	DROP-IN lens, flood (130 mm / 5.1")			
	1 x L2.77832.0	DROP-IN lens, super flood (130 mm / 5.1")			
	1 x L2.77834.0	DROP-IN lens, super flood frosted (130 mm / 5.1")			
	1 x L2.77818.0	Lens bag for max. 5 lenses up to Ø 235 mm, empty			
	1 x L2.70860.0	Lighthouse for ARRILUX 400, clear glass			
	1 x L2.70888.0	Speed ring, complete with adapter			
	1 x L2.70867.0	Shutter for ARRILUX 400 lighthouse			
	1 x L2.73408.0	Handgrip 16 mm spigot size with threat 3/8"			
	1 x L2.70865.0	Stirrup for ARRILUX 200/400 lighthouse			
	1 x L2.70902.0	Profi case for ARRILUX 400 Kit with lighthouse compartment (80 x 42 x 32 cm)			

ARRILITE 750 Plus KITS



ARRILITE 750 PLUS LIGHTING KITS

Ident. No.	Description		Price / EURO
L0.36700.D	**ARRILITE 750 Plus, 3 Tungsten Lighting Kit - with wheels**	Schuko-Plug	1.915,00 €
	3 x L3.36700.D ARRILITE 750 Plus with line switch incl. 4-leaf barndoor and accessory holder		
	3 x L2.36800.0 Lamp HPL* 750 W / 230 V G9,5 (Osram)		
	3 x L2.76965.0 Compact ARRI Kit Stand AS-01 (050MKA)		
	1 x L2.79460.0 Set of 4 Scrims (168 mm / 6.6 ")		
	1 x L2.77180.0 ARRI Filter Pack (2 x Frost F2, Heavy Frost 129, Daylight Blue Frost 224, Daylight 3/4 Blue 201)		
	1 x L2.36806.R Case for 3 lampheads (81 x 36 x 34 cm) with wheels		
L0.36700.0	**ARRILITE 750 Plus, 3 Tungsten Lighting Kit**	Schuko-Plug	1.870,00 €
	3 x L3.36700.D ARRILITE 750 Plus with line switch incl. 4-leaf barndoor and accessory holder		
	3 x L2.36800.0 Lamp HPL* 750 W / 230 V G9,5 (Osram)		
	3 x L2.76965.0 Compact ARRI Kit Stand AS-01 (050MKA)		
	1 x L2.79460.0 Set of 4 Scrims (168 mm / 6.6 ")		
	1 x L2.77180.0 ARRI Filter Pack (2 x Frost F2, Heavy Frost 129, Daylight Blue Frost 224, Daylight 3/4 Blue 201)		
	1 x L2.36806.0 Case for 3 lampheads (81 x 36 x 34 cm)		

* HPL lamp invented by and licensed from David Cunningham

ARRILITE 750 PLUS SETS (CONTINUE)

Ident. No.	Description			Price / EURO
L0.36700.B	**ARRILITE 750 Plus, 3 Tungsten Lighting Kit - with wheels**		bare ends	1.915,00 €
	3 x L3.36700.B	ARRILITE 750 Plus with line switch incl. 4-leaf barndoor and accessory holder		
	3 x L2.36800.0	Lamp HPL* 750 W / 230 V G9,5 (Osram)		
	3 x L2.76965.0	Compact ARRI Kit Stand AS-01 (050MKA)		
	1 x L2.79460.0	Set of 4 Scrims (168 mm / 6.6 ")		
	1 x L2.77180.0	ARRI Filter Pack (2 x Frost F2, Heavy Frost 129, Daylight Blue Frost 224, Daylight 3/4 Blue 201)		
	1 x L2.36806.R	Case for 3 lampheads (81 x 36 x 34 cm) with wheels		
L0.36700.E	**ARRILITE 750 Plus, 3 Tungsten Lighting Kit**		bare ends	1.870,00 €
	3 x L3.36700.B	ARRILITE 750 Plus with line switch incl. 4-leaf barndoor and accessory holder		
	3 x L2.36800.0	Lamp HPL* 750 W / 230 V G9,5 (Osram)		
	3 x L2.76965.0	Compact ARRI Kit Stand AS-01 (050MKA)		
	1 x L2.79460.0	Set of 4 Scrims (168 mm / 6.6 ")		
	1 x L2.77180.0	ARRI Filter Pack (2 x Frost F2, Heavy Frost 129, Daylight Blue Frost 224, Daylight 3/4 Blue 201)		
	1 x L2.36806.0	Case for 3 lampheads (81 x 36 x 34 cm)		

* HPL lamp invented by and licensed from David Cunningham

ARRILITE 2000 Plus KITS



ARRILITE 2000 PLUS LIGHTING KITS

Ident. No.	Description			Price / EURO
L0.36500.D	**ARRILITE 2000 Plus, 2 Tungsten Lighting Kit**		Schuko-Plug	1.454,00 €
	2 x L3.36500.D	ARRILITE 2000 Plus with line switch incl. 4-leaf barndoor		
	2 x L2.89212.0	Lamp FEX 2000 W / 230 V RX7s P2/27 (Osram)		
	1 x L2.76950.0	Set of 4 Scrims (254 mm / 10.0 ")		
	1 x L2.77180.0	ARRI Filter Pack (2 x Frost F2, Heavy Frost 129, Daylight Blue Frost 224, Daylight 3/4 Blue 201)		
	1 x L2.76956.P	Case for 2 lampheads (70 x 39 x 37 cm)		
L0.36500.B	**ARRILITE 2000 Plus, 2 Tungsten Lighting Kit**		bare ends	1.454,00 €
	2 x L3.36500.B	ARRILITE 2000 Plus with line switch incl. 4-leaf barndoor		
	2 x L2.89212.0	Lamp FEX 2000 W / 230 V RX7s P2/27 (Osram)		
	1 x L2.76950.0	Set of 4 Scrims (254 mm / 10.0 ")		
	1 x L2.77180.0	ARRI Filter Pack (2 x Frost F2, Heavy Frost 129, Daylight Blue Frost 224, Daylight 3/4 Blue 201)		
	1 x L2.76956.P	Case for 2 lampheads (70 x 39 x 37 cm)		

SOFTBANK I Plus KIT



SOFTBANK I PLUS LIGHTING KIT

Ident. No.	Description			Price / EURO
L0.76597.S	**Softbank I Plus Lighting Kit**		Schuko-Plug	3.035,00 €
	1 x L3.79200.D	ARRI 300 Plus with line switch incl. 4-leaf barndoor, filter frame		
	2 x L3.79400.D	ARRI 650 Plus with line switch incl. 4-leaf barndoor, filter frame		
	1 x L3.36700.D	ARRILITE 750 Plus with line switch incl. 4-leaf barndoor, accessory holder		
	1 x L2.89203.0	Lamp T 300 W / 240 V GY 9,5 CP/81 (Osram)		
	2 x L2.89205.0	Lamp T 650 W / 230 V GY 9,5 CP/89 (Osram)		
	1 x L2.36800.0	Lamp HPL* 750 W / 230 V G9,5 (Osram)		
	1 x L2.79160.A	Scrim, full single (130 mm / 5.1 ")		
	1 x L2.79160.B	Scrim, full double (130 mm / 5.1 ")		
	3 x L2.79460.A	Scrim, full single (168 mm / 6.6 ")		
	3 x L2.79460.B	Scrim, full double (168 mm / 6.6 ")		
	1 x L2.70844.0	Chimera Lightbank Video Pro Plus "S"		
	4 x L2.76976.0	Medium ARRI Kit Stand AS-2 (050A)		
	1 x L2.86270.0	Accessory Pack		
	1 x L2.76594.0	Heavy Duty Case with wheels (102 x 48 x 34 cm)		

* HPL lamp invented by and licensed from David Cunningham

SOFTBANK IV Plus KIT



SOFTBANK IV PLUS LIGHTING KIT

Ident. No.	Description			Price / EURO
L0.76599.S	**Softbank IV Plus Lighting Kit**		Schuko-Plug	3.365,00 €
	2 x L3.79360.D	ARRI 150 with line switch incl. 4-leaf barndoor, filter frame		
	1 x L3.79200.D	ARRI 300 Plus with line switch incl. 4-leaf barndoor, filter frame		
	1 x L3.79400.D	ARRI 650 Plus with line switch incl. 4-leaf barndoor, filter frame		
	1 x L3.36700.D	ARRILITE 750 Plus with line switch incl. 4-leaf barndoor, accessory holder		
	2 x L2.89202.0	Lamp T 150 W / 240 V GX 6,35 (Osram)		
	1 x L2.89203.0	Lamp T 300 W / 240 V GY 9,5 CP/81 (Osram)		
	1 x L2.89205.0	Lamp T 650 W / 230 V GY 9,5 CP/89 (Osram)		
	1 x L2.36800.0	Lamp HPL* 750 W / 230 V G9,5 (Osram)		
	2 x L2.73466.A	Scrim, full single (78 mm / 3.1")		
	2 x L2.73466.B	Scrim, full double (78 mm / 3.1")		
	1 x L2.79160.A	Scrim, full single (130 mm / 5.1 ")		
	1 x L2.79160.B	Scrim, full double (130 mm / 5.1 ")		
	2 x L2.79460.A	Scrim, full single (168 mm / 6.6")		
	2 x L2.79460.B	Scrim, full double (168 mm / 6.6")		
	1 x L2.70844.0	Chimera Lightbank Video Pro Plus "S"		
	1 x L2.86270.0	Accessory Pack		
	1 x L2.86271.0	Super Clamp with 5/8" Stud		
	1 x L2.86272.0	Ceiling Scissor Clamp		
	4 x L2.76976.0	Medium ARRI Kit Stand AS-2 (050A)		
	1 x L2.76594.0	Heavy Duty Case with wheels (102 x 48 x 34 cm)		

* HPL lamp invented by and licensed from David Cunningham

ARRI 650/3 KIT



ARRI 650/3 LIGHTING KIT

Ident. No.	Description			Price / EURO
L0.79400.C	**ARRI 650/3 Lighting Kit**		Schuko-Plug	2.045,00 €
	3 x L3.79400.D	ARRI 650 Plus with line switch incl. 4-leaf barndoor, filter frame		
	3 x L2.89205.0	Lamp T 650 W / 230 V GY 9,5 CP/89 (Osram)		
	3 x L2.79460.A	Scrim, full single (168 mm / 6.6")		
	3 x L2.79460.B	Scrim, full double (168 mm / 6.6")		
	3 x L2.76965.0	Compact ARRI Kit Stand AS-01 (050MKA)		
	1 x L2.76592.0	Compact 3-Light case with wheels (83 x 43 x 27 cm)		

300/650 FRESNEL COMBO KIT



300/650 FRESNEL COMBO LIGHTING KIT

Ident. No.	Description			Price / EURO
L0.76598.F	**300/650 Fresnel Combo Lighting Kit**		Schuko-Plug	2.685,00 €
	2 x L3.79200.D	ARRI 300 Plus with line switch incl. 4-leaf barndoor, filter frame		
	2 x L3.79400.D	ARRI 650 Plus with line switch incl. 4-leaf barndoor, filter frame		
	2 x L2.89205.0	Lamp T 650 W / 230 V GY 9,5 CP/89 (Osram)		
	2 x L2.89203.0	Lamp T 300 W / 240 V GY 9,5 CP/81 (Osram)		
	2 x L2.79160.A	Scrim, full single (130 mm / 5.1 ")		
	2 x L2.79160.B	Scrim, full double (130 mm / 5.1 ")		
	2 x L2.79460.A	Scrim, full single (168 mm / 6.6 ")		
	2 x L2.79460.B	Scrim, full double (168 mm / 6.6 ")		
	4 x L2.76976.0	Medium ARRI Kit Stand AS-2 (050A)		
	1 x L2.86270.0	Accessory Pack		
	1 x L2.76594.0	Heavy Duty Case with wheels (102 x 48 x 34 cm)		

SETS - LAMPHEAD, BALLAST & ACCESSORIES

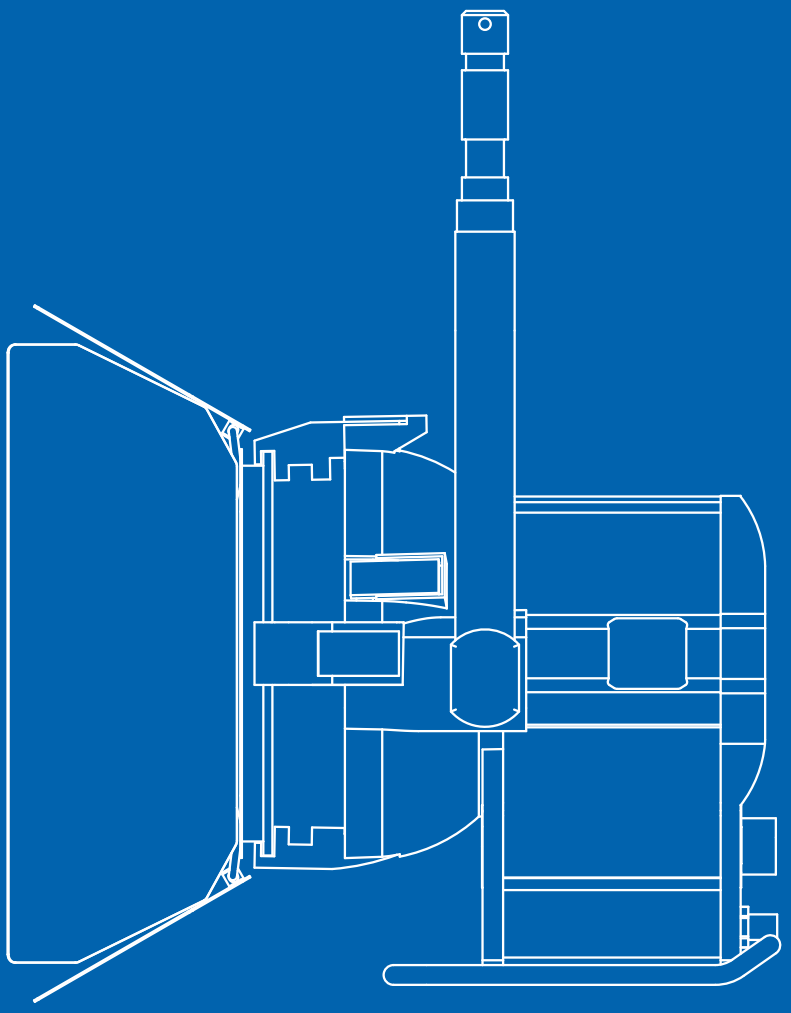

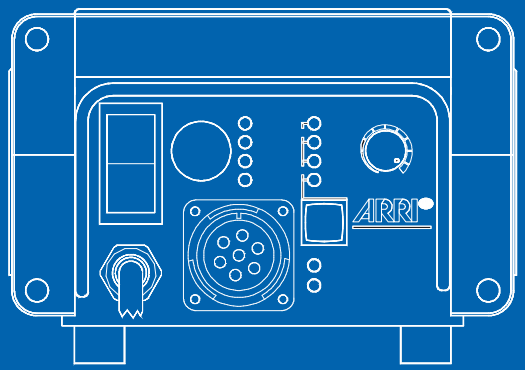

M-SERIES SETS

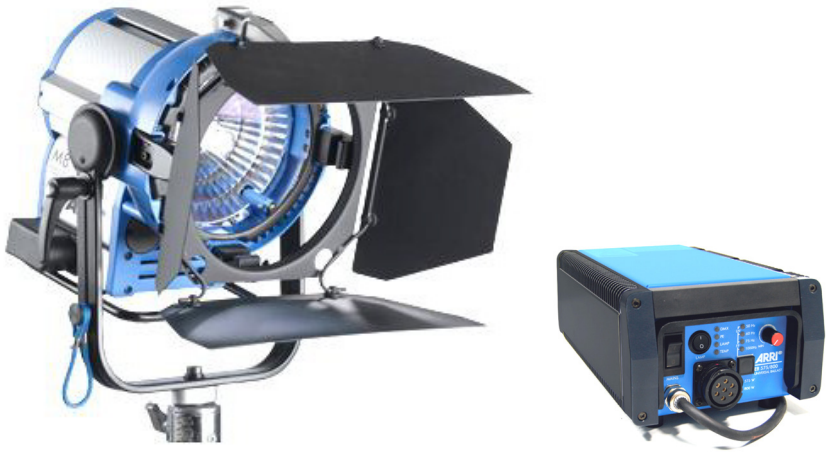

M-SERIES SETS

Ident. No.	Description			Price / EURO
L0.37200HS	**M8 High Speed Set**		International (VEAM)	5.620,00 €
	1 x L1.37200.B	M8, blue/silver		
	1 x L2.76184KH	EB® 575/800 with ALF, CCL, DMX, 1000 Hz		
	1 x L2.39870.0	4-leaf barndoor, True Blue® (245 mm / 9.7")		
	1 x L2.37207.0	Spillring (230 mm / 9.1")		
	1 x L2.75600.0	Head-to-Ballast cable 575/800/1200/1800 W, 7 m		
L0.37600.B	**M18 Set**		International (VEAM)	7.555,00 €
	1 x L1.37600.B	M18, blue/silver		
	1 x L2.76625.0	EB® 1200/1800 with ALF, CCL		
	1 x L2.40950.0	4-leaf barndoor, True Blue® (344 mm / 13.5")		
	1 x L2.37670.0	Spillring (330 mm / 13.0")		
	1 x L2.75600.0	Head-to-Ballast cable 575/800/1200/1800 W, 7 m		
L0.37600HS	**M18 High Speed Set**		International (VEAM)	8.345,00 €
	1 x L1.37600.B	M18, blue/silver		
	1 x L2.76625KH	EB® 1200/1800 with ALF, CCL, 1000 Hz		
	1 x L2.40950.0	4-leaf barndoor, True Blue® (344 mm / 13.5")		
	1 x L2.37670.0	Spillring (330 mm / 13.0")		
	1 x L2.75600.0	Head-to-Ballast cable 575/800/1200/1800 W, 7 m		

M-SERIES LIGHTING SET (CONTINUE)

Ident. No.	Description			Price / EURO
L0.37400BC	**M40 Set**		International (VEAM)	11.240,00 €
	1 x L1.37400.B	M40, blue/silver		
	1 x L2.76650.0	EB® 2.5/4 with ALF, CCL		
	1 x L2.41200.0	4-leaf barndoor, True Blue® (413 mm / 16.3")		
	1 x L2.37305.0	Spillring (400 mm / 15.8")		
	1 x L2.75620.0	Head-to-Ballast cable 2500/4000 W, 7 m		
L0.37400HS	**M40 High Speed Set**		International (VEAM)	12.405,00 €
	1 x L1.37400.B	M40, blue/silver		
	1 x L2.76640KH	EB® 2.5/4 with ALF, 1000 Hz		
	1 x L2.41200.0	4-leaf barndoor, True Blue® (413 mm / 16.3")		
	1 x L2.37305.0	Spillring (400 mm / 15.8")		
	1 x L2.75620.0	Head-to-Ballast cable 2500/4000 W, 7 m		
L0.37480.B	**M90 Set**		International (VEAM)	20.900,00 €
	1 x L1.37480.B	M90, blue/silver		
	1 x L2.76181.0	EB® 6/9 with ALF, CCL, DMX		
	1 x L2.37560.0	4-leaf barndoor (584 mm / 23.0")		
	1 x L2.37561.0	Spillring (571 mm / 22.5")		
	1 x L2.77940.B	Head-to-Ballast cable 6000/9000 W, 10 m		
L0.37480HS	**M90 High Speed Set**		International (VEAM)	22.050,00 €
	1 x L1.37480.B	M90, blue/silver		
	1 x L2.76181KH	EB® 6/9 with ALF, CCL, DMX, 1000 Hz		
	1 x L2.37560.0	4-leaf barndoor (584 mm / 23.0")		
	1 x L2.37561.0	Spillring (571 mm / 22.5")		
	1 x L2.77940.B	Head-to-Ballast cable 6000/9000 W, 10 m		
L0.37950.S	**ARRIMAX® 18/12 Set - with barndoor**		International (VEAM)	33.700,00 €
	1 x L1.37950.B	ARRIMAX® 18/12, blue/silver		
	1 x L2.76295.0	EB® 12/18, with ALF, DMX & trolley		
	1 x L2.71100.0	4-leaf barndoor (740 mm / 29.1")		
	1 x L2.37940.0	Spot reflector for ARRIMAX® 18/12, 8° - 15° Half Peak Angle		
	1 x L2.82294.0	Head-to-Ballast/Dimmer cable 12/18/24 kW		
L0.37950.R	**ARRIMAX® 18/12 Set - with snoot**		International (VEAM)	33.780,00 €
	1 x L1.37950.B	ARRIMAX® 18/12, blue/silver		
	1 x L2.76295.0	EB® 12/18, with ALF, DMX & trolley		
	1 x L2.37941.0	Snoot (740 mm / 29.1") with variable frame		
	1 x L2.37940.0	Spot reflector for ARRIMAX® 18/12, 8° - 15° Half Peak Angle		
	1 x L2.82294.0	Head-to-Ballast/Dimmer cable 12/18/24 kW		

ARRISUN® SETS



ARRISUN® SETS

Ident. No.	Description			Price / EURO
L0.77850.X	**ARRISUN® 5 Set**		International (VEAM)	6.095,00 €
	1 x L1.77850.B	ARRISUN® 5, blue/silver		
	1 x L2.76125.0	EB® 575/1200		
	1 x L2.79670.0	4-leaf barndoor (197 mm / 7.8")		
	1 x L2.77864.0	DROP-IN lens, spot (175 mm / 6.9")		
	1 x L2.77866.0	DROP-IN lens, narrow flood (175 mm / 6.9")		
	1 x L2.77868.0	DROP-IN lens, flood (175 mm / 6.9")		
	1 x L2.77870.0	DROP-IN lens, super flood (175 mm / 6.9")		
	1 x L2.77872.0	DROP-IN lens, super flood frosted (175 mm / 6.9")		
	1 x L2.77853.0	Case for 1 x ARRISUN® 5, ballast, lenses & accessories (45 x 32 x 47 cm)		
	1 x L2.75600.0	Head-to-Ballast cable 575/800/1200/1800 W, 7 m		
L0.37570.B	**AS 18 Set**		International (VEAM)	8.730,00 €
	1 x L1.37570.B	AS 18, blue/silver		
	1 x L2.76625.0	EB® 1200/1800 with ALF, CCL		
	1 x L2.40950.0	4-leaf barndoor, True Blue® (344 mm / 13.5")		
	1 x L2.76821.0	DROP-IN lens, spot (250 mm / 9.8")		
	1 x L2.76822.0	DROP-IN lens, narrow flood (250 mm / 9.8")		
	1 x L2.76823.0	DROP-IN lens, flood (250 mm / 9.8")		
	1 x L2.76824.0	DROP-IN lens, super flood (250 mm / 9.8")		
	1 x L2.76825.0	DROP-IN lens, super flood frosted (250 mm / 9.8")		
	1 x L2.76827.0	Lens case for 5 lenses, empty (36 x 21 x 41 cm)		
	1 x L2.75600.0	Head-to-Ballast cable 575/800/1200/1800 W, 7 m		

ARRISUN® LIGHTING SET (CONTINUE)

Ident. No.	Description			Price / EURO
L0.77480DX	**ARRISUN® 60 Set**		International (VEAM)	18.620,00 €
	1 x L1.77480.B	ARRISUN® 60, blue/silver		
	1 x L2.76193.0	EB® 6000 Baby with ALF		
	1 x L2.82150.0	4-leaf barndoor (510 mm / 20.1")		
	1 x L2.76887.0	DROP-IN lens, spot (420 mm / 16.5")		
	1 x L2.76888.0	DROP-IN lens, narrow flood (420 mm / 16.5")		
	1 x L2.76889.0	DROP-IN lens, flood (420 mm / 16.5")		
	1 x L2.76890.0	DROP-IN lens, super flood (420 mm / 16.5")		
	1 x L2.76891.0	DROP-IN lens, super flood frosted (420 mm / 16.5")		
	1 x L2.77932.0	Lens case for 5 lenses up to Ø 495 mm, empty (66 x 35 x 69 cm), expandable for Ø 600 mm lenses		
	1 x L2.77940.0	Head-to-Ballast cable 6000/9000 W, 7 m		

DAYLIGHT FRESNEL



TRUE BLUE® D SETS

Ident. No.	Description			Price / EURO
L0.33770.X	**True Blue® D5 Set**		International (VEAM)	4.771,00 €
	1 x L1.33770.B	True Blue® D5, blue/silver		
	1 x L2.76125.0	EB® 575/1200		
	1 x L2.39670.0	4-leaf barndoor, True Blue® (197 mm / 7.8")		
	1 x L2.79690.0	Filter Frame (197 mm / 7.8")		
	1 x L2.75600.0	Head-to-Ballast cable 575/800/1200/1800 W, 7 m		
L0.0001664	**True Blue® D5 Set - with ALF**		International (VEAM)	5.061,00 €
	1 x L1.33770.B	True Blue® D5, blue/silver		
	1 x L2.76425.0	EB® 575/1200 with ALF		
	1 x L2.39670.0	4-leaf barndoor, True Blue® (197 mm / 7.8")		
	1 x L2.79690.0	Filter Frame (197 mm / 7.8")		
	1 x L2.75600.0	Head-to-Ballast cable 575/800/1200/1800 W, 7 m		
L0.0001665	**True Blue® D5 Set - with ALF, DMX**		International (VEAM)	5.451,00 €
	1 x L1.33770.B	True Blue® D5, blue/silver		
	1 x L2.76426.0	EB® 575/1200 with ALF, DMX		
	1 x L2.39670.0	4-leaf barndoor, True Blue® (197 mm / 7.8")		
	1 x L2.79690.0	Filter Frame (197 mm / 7.8")		
	1 x L2.75600.0	Head-to-Ballast cable 575/800/1200/1800 W, 7 m		
L0.33730.X	**True Blue® D12 Set**		International (VEAM)	5.466,00 €
	1 x L1.33730.B	True Blue® D12, blue/silver		
	1 x L2.76125.0	EB® 575/1200		
	1 x L2.39870.0	4-leaf barndoor, True Blue® (245 mm / 9.7")		
	1 x L2.79890.0	Filter Frame (230 mm / 9.1")		
	1 x L2.75600.0	Head-to-Ballast cable 575/800/1200/1800 W, 7 m		

DAYLIGHT FRESNEL SETS (CONTINUE)

L0.0001659	**True Blue® D12 Set - with ALF**		International (VEAM)	5.756,00	€
	1 x L1.33730.B	True Blue® D12, blue/silver			
	1 x L2.76425.0	EB® 575/1200 with ALF			
	1 x L2.39870.0	4-leaf barndoor, True Blue® (245 mm / 9.7")			
	1 x L2.79890.0	Filter Frame (230 mm / 9.1")			
	1 x L2.75600.0	Head-to-Ballast cable 575/800/1200/1800 W, 7 m			
L0.0001660	**True Blue® D12 Set - with ALF, DMX**		International (VEAM)	6.146,00	€
	1 x L1.33730.B	True Blue® D12, blue/silver			
	1 x L2.76426.0	EB® 575/1200 with ALF, DMX			
	1 x L2.39870.0	4-leaf barndoor, True Blue® (245 mm / 9.7")			
	1 x L2.79890.0	Filter Frame (230 mm / 9.1")			
	1 x L2.75600.0	Head-to-Ballast cable 575/800/1200/1800 W, 7 m			
L0.33670.X	**True Blue® D25 Set**		International (VEAM)	9.368,00	€
	1 x L1.33670.B	True Blue® D25, blue/silver			
	1 x L2.76635.0	EB® 2500 with ALF			
	1 x L2.40950.0	4-leaf barndoor, True Blue® (344 mm / 13.5")			
	1 x L2.80970.0	Filter Frame (330 mm / 13.0")			
	1 x L2.75620.0	Head-to-Ballast cable 2500/4000 W, 7 m			
L0.33670XB	**True Blue® D25 Set**		International (VEAM)	8.728,00	€
	1 x L1.33670.B	True Blue® D25, blue/silver			
	1 x L2.76695.0	EB® 2500 Baby with ALF			
	1 x L2.40950.0	4-leaf barndoor, True Blue® (344 mm / 13.5")			
	1 x L2.80970.0	Filter Frame (330 mm / 13.0")			
	1 x L2.75620.0	Head-to-Ballast cable 2500/4000 W, 7 m			
L0.0001662	**True Blue® D25 Set - with ALF**		International (VEAM)	9.703,00	€
	1 x L1.33670.B	True Blue® D25, blue/silver			
	1 x L2.76640.0	EB® 2.5/4 with ALF			
	1 x L2.40950.0	4-leaf barndoor, True Blue® (344 mm / 13.5")			
	1 x L2.80970.0	Filter Frame (330 mm / 13.0")			
	1 x L2.75620.0	Head-to-Ballast cable 2500/4000 W, 7 m			
L0.0001661	**True Blue® D25 Set - with ALF, DMX**		International (VEAM)	10.088,00	€
	1 x L1.33670.B	True Blue® D25, blue/silver			
	1 x L2.76641.0	EB® 2.5/4 with ALF, DMX			
	1 x L2.40950.0	4-leaf barndoor, True Blue® (344 mm / 13.5")			
	1 x L2.80970.0	Filter Frame (330 mm / 13.0")			
	1 x L2.75620.0	Head-to-Ballast cable 2500/4000 W, 7 m			
L0.34000.X	**True Blue® D40 Set - with ALF**		International (VEAM)	10.860,00	€
	1 x L1.34000.B	True Blue® D40, blue/silver			
	1 x L2.76640.0	EB® 2.5/4 with ALF			
	1 x L2.41200.0	4-leaf barndoor, True Blue® (413 mm / 16.3")			
	1 x L2.81220.0	Filter Frame (400 mm / 15.8")			
	1 x L2.75620.0	Head-to-Ballast cable 2500/4000 W, 7 m			

COMPACT SETS

Ident. No.	Description			Price / EURO
NEW L0.73330SD	**Compact 200 Set - with Case**		Amphenol	3.054,00 €
	1 x L1.73330.B	Compact 200, blue/silver		
	1 x L2.76013.B	EB® 125/200 with ALF		
	1 x L2.79470.0	4-leaf barndoor (168 mm / 6.6")		
	1 x L2.79490.0	Filter Frame (168 mm / 6.6")		
	1 x L2.73372.0	Head-to-Ballast cable 200 W, 7 m		
	1 x L2.73365.0	Case, empty (43 x 29 x 34 cm)		
L0.75720.X	**Compact 6000 Plus Set - with EB® 6000 Baby**		International (VEAM)	18.070,00 €
	1 x L1.75720.B	Compact 6000 Plus, blue/silver		
	1 x L2.76193.0	EB® 6000 Baby with ALF		
	1 x L2.82150.0	4-leaf barndoor (510 mm / 20.1")		
	1 x L2.82155.0	Filter Frame (495 mm / 19.5")		
	1 x L2.77940.0	Head-to-Ballast cable 6000/9000 W, 7 m, International connector (VEAM)		
L0.0001658	**Compact 6000 Plus Set - with EB® 6/12**		International (VEAM)	19.920,00 €
	1 x L1.75720.B	Compact 6000 Plus, blue/silver		
	1 x L2.76172.0	EB® 6/12 with ALF		
	1 x L2.82150.0	4-leaf barndoor (510 mm / 20.1")		
	1 x L2.82155.0	Filter Frame (495 mm / 19.5")		
	1 x L2.77940.0	Head-to-Ballast cable 6000/9000 W, 7 m		

ARRI DAYLIGHT SET

Ident. No.	Description			Price / EURO
L0.71160.X	**ARRI Daylight 18/12 Set**		International (VEAM)	30.420,00 €
	1 x L1.71160.B	ARRI Daylight 18/12, blue/silver		
	1 x L2.76290.0	EB® 12/18 with ALF & trolley		
	1 x L2.71100.0	4-leaf barndoor (740 mm / 29.1")		
	1 x L2.71110.0	Filter Frame (740 mm / 29.1")		
	1 x L2.82294.0	Head-to-Ballast/Dimmer cable 12/18/24 kW, 15 m		

LED



L5 LED FRESNEL NEW

Type of Lamphead:	**LED Fresnel**
Lamp Type:	**LED**
Lens Diameter:	**137 mm**
Mounting:	**Spigot 28 mm (short), 16 mm Socket**
Size (HxWxL) /	**MAN: 321 x 278 x 280 mm /**
	P.O.: 315 x 270 x 280 mm
Packed Size:	**470 x 400 x 410 mm**
Packed Volume:	**0.08 m³**
Weight / Packed Weight:	**MAN: 5.1 kg / 5.5 kg**
	P.O.: 7.0 kg / 7.4 kg
Protection Class / IP Rating:	**I / IP20**
Certifications:	**CE, CB, GS, cNTRLus, FCC, ISO9001:2000**

ALL VERSIONS include the following configuration:

Exchangeable powerCON TRUE1 mains cable (90 - 250 V~)
Onboard control panel
5-pin DMX in and thru connector
4-pin battery connector (22 - 36 V⎓)
16 mm / 28 mm Combo Pin (Baby 5/8" / Junior 1 1/8" Combo Pin)

STAND-MOUNT
7 m (23 ft) cable with Edison connector and line switch
3 m (9 ft) cable with Schuko connector and line switch

HANGING
1.5 m (5 ft) cable with Bare Ends

POLE OPERATED (P.O.)
1.5 m (5 ft) cable with Bare Ends
Pole Operation for pan, tilt and focus

NOT INCLUDED
Barndoors (have to be ordered separately)

ARRI L5-C NEW

Color Controllable - Tuneable White (2,800 K - 10,000 K), Green-Magenta Adjustment and Full RGBW Color Gamut

Ident. No.	Description				Price / EURO	
L0.0001956	L5-C	Stand-Mount	Blue/Silver	7 m Edison connector	1.750,00	€
L0.0001955	L5-C	Stand-Mount	Blue/Silver	3 m Schuko connector	1.750,00	€
L0.0001958	L5-C	Hanging	Blue/Silver	Bare Ends	1.750,00	€
L0.0001954	L5-C	Hanging	Black	Bare Ends	1.750,00	€
L0.0001953	L5-C	P.O.	Blue/Silver	Bare Ends	1.850,00	€
L0.0001952	L5-C	P.O.	Black	Bare Ends	1.850,00	€

ARRI L5-TT NEW

Tuneable Tungsten - Tuneable White (2,600 K - 3,600 K) and Green-Magenta Adjustment

Ident. No.	Description				Price / EURO
L0.0001980	L5-TT	Stand-Mount	Blue/Silver	7 m Edison connector	1.600,00 €
L0.0001979	L5-TT	Stand-Mount	Blue/Silver	3 m Schuko connector	1.600,00 €
L0.0001982	L5-TT	Hanging	Blue/Silver	Bare Ends	1.600,00 €
L0.0001978	L5-TT	Hanging	Black	Bare Ends	1.600,00 €
L0.0001977	L5-TT	P.O.	Blue/Silver	Bare Ends	1.700,00 €
L0.0001976	L5-TT	P.O.	Black	Bare Ends	1.700,00 €

ARRI L5-DT NEW

Tuneable Daylight - Tuneable White (5,000 K - 6,500 K) and Green-Magenta Adjustment

Ident. No.	Description				Price / EURO
L0.0001991	L5-DT	Stand-Mount	Blue/Silver	7 m Edison connector	1.750,00 €
L0.0001990	L5-DT	Stand-Mount	Blue/Silver	3 m Schuko connector	1.750,00 €
L0.0001992	L5-DT	Hanging	Blue/Silver	Bare Ends	1.750,00 €
L0.0001988	L5-DT	Hanging	Black	Bare Ends	1.750,00 €
L0.0001987	L5-DT	P.O.	Blue/Silver	Bare Ends	1.850,00 €
L0.0001986	L5-DT	P.O.	Black	Bare Ends	1.850,00 €

COMPONENTS:

Ident. No.	Description	Price / EURO
L2.0001487	Mains cable, 7 m, powerCON TRUE1 / Edison, with line switch	50,00 €
L2.0001486	Mains cable, 3 m, powerCON TRUE1 / Schuko, with line switch	50,00 €
L2.0001485	Mains cable, 1.5 m, powerCON TRUE1 / bare ends	50,00 €
L2.79470.0	4-leaf barndoor (168 mm / 6.6")	59,00 €
L2.79471.0	4-leaf barndoor, black/silver (168 mm / 6.6")	115,00 €
L2.79500.0	8-leaf barndoor (168 mm / 6.6")	110,00 €
L2.79490.0	Filter Frame (168 mm / 6.6")	20,00 €
L2.89068.0	Speed ring circular (9670) (168 mm / 6.6")	115,00 €
L2.70844.0	Chimera Lightbank Video Pro Plus "S", incl. 3 front screens (8125)	360,00 €
L2.79480.0	Snoot (168 mm / 6.6")	65,00 €
L2.76976.0	Medium ARRI Kit Stand LS.2 (050A)	76,00 €
L2.76965.0	Compact ARRI Kit Stand LS.01 (050MKA)	82,00 €
L2.88679.0	Wheel set with brakes, Ø 75 mm / 22 mm mount (110)	79,00 €
L2.40701.3	Spigot 28 mm, long, with flange & allen screw, fits profile stirrups without sleeve cuff	15,00 €
L2.76990.0	Safety cable (4 mm) 1 m, with "Kettbiner"	22,00 €



L7 LED FRESNEL

Type of Lamphead:	**LED Fresnel**
Lamp Type:	**LED**
Lens Diameter:	**175 mm**
Mounting:	**Spigot 28 mm**
Size (HxWxL) /	**349 x 374 x 423 mm /**
Packed Size:	**480 x 400 x 400 mm**
Packed Volume:	**0.76 m³**
Weight / Packed Weight:	**MAN: 8.2 kg / 12.4 kg**
	P.O.: 9.8 kg / 12.8 kg
Protection Class / IP Rating:	**I / IP20**
Certifications:	**CE, CB, GS, cNTRLus, FCC, ISO9001:2000**

LE2

Light Engine 2 with improved brightness

ALL VERSIONS

include the following configuration:

Onboard control panel
5-pin DMX in and thru connector
28 mm (1 1/8") Junior Pin

STAND-MOUNT

7 m (23 ft) cable with Edison connector and line switch
3 m (9 ft) cable with Schuko connector and line switch

HANGING

1.5 m (5 ft) cable with Bare Ends

POLE OPERATED (P.O.)

1.5 m (5 ft) cable with Bare Ends
Pole Operation for pan, tilt and focus

NOT INCLUDED

Barndoors (have to be ordered separately)

ARRI L7-C LE2 NEW

Color Controllable - Tuneable White (2800 K - 10,000 K), Green-Magenta Adjustment and Full RGBW Color Gamut

Ident. No.	Description					Price / EURO	
L1.0003645	L7-C	LE2	Stand-Mount	Blue/Silver	7 m Edison connector	2.490,00	€
L1.0003647	L7-C	LE2	Stand-Mount	Blue/Silver	3 m Schuko connector	2.490,00	€
L1.0003646	L7-C	LE2	Hanging	Blue/Silver	Bare Ends	2.490,00	€
L1.0003649	L7-C	LE2	Hanging	Black	Bare Ends	2.490,00	€
L1.0003648	L7-C	LE2	P.O.	Blue/Silver	Bare Ends	2.590,00	€
L1.0003650	L7-C	LE2	P.O.	Black	Bare Ends	2.590,00	€

ARRI L7-TT

Tuneable Tungsten - Tuneable White (2600 K to 3600 K) and Green-Magenta Adjustment

Ident. No.	Description				Price / EURO
L1.31530TD	L7-TT	Stand-Mount	blue/silver	3 m Schuko connector	2.240,00 €
L1.31530TA	L7-TT	Stand-Mount	blue/silver	7 m Edison connector	2.265,00 €
L1.31530TC	L7-TT	Hanging	blue/silver	Bare Ends	2.240,00 €
L1.31535TC	L7-TT	Hanging	Black	Bare Ends	2.240,00 €
L1.31530TR	L7-TT	P.O.	blue/silver	Bare Ends	2.320,00 €
L1.31535TR	L7-TT	P.O.	Black	Bare Ends	2.320,00 €

ARRI L7-DT

Tuneable Daylight - Tuneable White (5000 K - 6500 K) and Green-Magenta Adjustment

Ident. No.	Description				Price / EURO
L1.31530DD	L7-DT	Stand-Mount	blue/silver	3 m Schuko connector	2.240,00 €
L1.31530DA	L7-DT	Stand-Mount	blue/silver	7 m Edison connector	2.265,00 €
L1.31530DC	L7-DT	Hanging	blue/silver	Bare Ends	2.240,00 €
L1.31535DC	L7-DT	Hanging	Black	Bare Ends	2.240,00 €
L1.31530DR	L7-DT	P.O.	blue/silver	Bare Ends	2.320,00 €
L1.31535DR	L7-DT	P.O.	Black	Bare Ends	2.320,00 €

COMPONENTS:

Ident. No.	Description	Price / EURO
L2.39700.0	8-leaf barndoor, True Blue® (197 mm / 7.8")	120,00 €
L2.39670.0	4-leaf barndoor, True Blue® (197 mm / 7.8")	80,00 €
L2.79690.0	Filter Frame (197 mm / 7.8")	21,00 €
L2.76990.0	Safety cable (4 mm) 1 m, with "Kettbiner"	22,00 €

This page is intentionally left blank

This page is intentionally left blank

LED Caster 2 Plus



Type of Lamphead:	**ARRI CASTER, 35 W**
Lamp Type:	**LED**
Mounting:	**Thread 3/8"**
Size (HxWxL) /	**96 x 70 x 218 mm /**
Packed Size:	**115 x 80 x 235 mm**
Packed Volume:	**0.002 m³**
Weight /	**0.96 kg /**
Packed Weight:	**1.2 kg**
Protection Class / IP Rating:	**III / IP20**
Certifications:	**CE, FCC**

CASTER 2 PLUS

(without powersupply, without barndoor)

Ident.-No.	Description				Price / EURO
L1.0001329	LoCaster 2 Plus 35 W	with Onboard Controls	black	11 - 36 V⎓	750,00 €
L1.0002309	BroadCaster 2 Plus 35 W	with Power DMX Control	black	11 - 36 V⎓	750,00 €

COMPONENTS:

Ident. No.	Description	Price / EURO
L2.30083.0	Caster power supply, 1 x XLR 4-Pin, 24 V⎓ / 60 W; 100 - 240 V~ 50/60 Hz; Schuko-Plug	100,00 €
L2.30084.0	Caster power supply, 3 x XLR 4-Pin, 24 V⎓ / 300 W; 100 - 240 V~ 50/60Hz; Schuko-Plug	800,00 €
L2.30081.0	Power-DMX cable (4-pin XLR), 3 m	60,00 €
L2.30071.0	Power-DMX cable (4-pin XLR), 5 m	70,00 €
L2.30105.0	Battery cable (4-pin XLR), 3 m (with blue marking on cable)	58,00 €
L2.30085.0	Caster battery pack, rechargeable, NiMH 30 V⎓ / 81 Wh	550,00 €
L2.30086.0	Caster battery charger, 100-240 V~ 50/60 Hz	240,00 €
L2.30061.0	2-leaf barndoor, square, Caster-Series	50,00 €
L2.30059.0	Filter Frame for Caster	28,00 €
L2.30058.0	Caster folding intensifier	130,00 €
L2.72937.0	Car power adapter for LoCaster, cigarette lighter to XLR 4-pin	34,50 €
L2.30099.0	Light case for 1 x Caster & accessories, empty	140,00 €

LED CASTER 2 PLUS (CONTINUE)

COMPONENTS:

Ident. No.	Description	Price / EURO
L2.30992.0	ARRI Swiveling / Noga Arm	110,00 €
L2.30991.0	Adapter for Hot Shoe, 3/8"	48,00 €
L2.88681.0	Adapter spigot, 1/4" + 3/8", female threads	4,00 €
L2.88639.0	Female Adapter for 16 mm (5/8") spigot with 3/8" stud	12,00 €
L2.30088.0	Adapter stud 16 mm + 120 mm for Gobo head mounting	30,00 €
L2.76986.0	Stud 16 mm with thread 3/8" (036-38), plugs into Superclamp (035)	6,00 €
L2.30130.0	Multi Connector joining bracket with stud 16 mm / 5/8 ", for two Casters	56,50 €
L2.30089.0	Caster stirrup with battery pack attachment	78,00 €
L2.76100.0	ARRI Super Clamp with plate for EB® / EBB	85,00 €
L2.76985.0	ARRI Super Clamp (035)	28,00 €
L2.76975.0	Small ARRI Kit Stand LS.1 (050KA)	79,00 €
L2.8803653	Master Stand (1004BAC)	121,00 €
L2.76809.0	Safety cable, 3 mm thick, 0.6 m long, with "Kettbiner"	17,00 €

DAYLIGHT

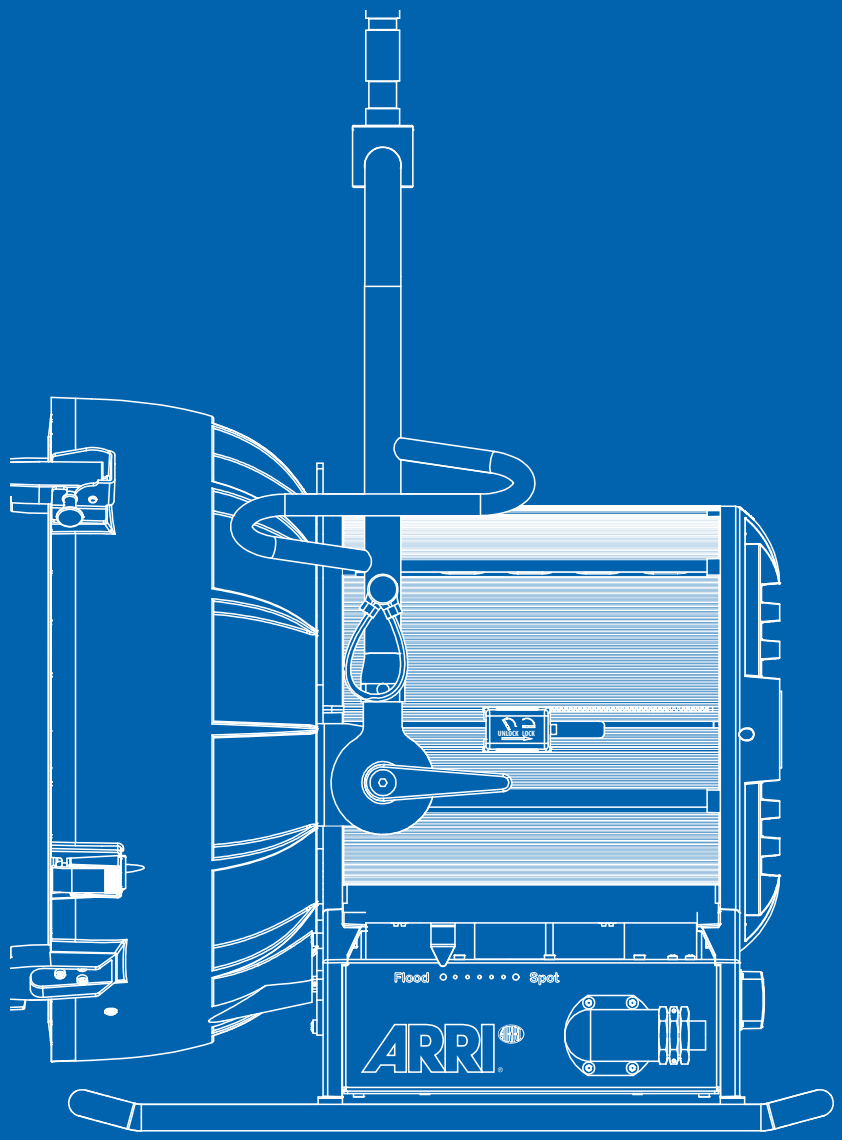



M8

Type of Lamphead:	**Open Face with Facetted Reflector, 800 W**
Lamp Type:	**Metal Halide 800 W/SE only! No 575 W lamps!**
Lamp Base:	**G22**
Lens Diameter:	**200 mm**
Mounting:	**Spigot 28 mm**
Size (HxWxL) / Packed Size:	**458 x 344 x 311 mm / 440 x 400 x 460 mm**
Packed Volume:	**0.08 m³**
Weight / Packed Weight:	**7.8 kg / 9.5 kg**
Protection Class / IP Rating:	**I / IP23**
Certifications:	**CE, CB, GS, cNTRLus**

OPEN FACE DAYLIGHT LAMPHEAD WITH MAX TECHNOLOGY®

(cable length 0.5 m, without barndoor)

Ident. No.	Description					Price / EURO
L1.37200.B	M8	MAN	blue/silver	International (VEAM)		2.195,00 €

BALLASTS:

Ident. No.	Description					Price / EURO
L2.76184KH	EB® 575/800	ALF, CCL, DMX	50/60/75/1000 Hz	International (VEAM)	120/230 V~ Schuko-Plug	2.995,00 €
L2.75600.0	Head-to-Ballast cable 575/800/1200/1800 W, 7 m, International connector (VEAM)					280,00 €
L2.75600.C	Head-to-Ballast cable 575/800/1200/1800 W, 15 m, International connector (VEAM)					355,00 €

COMPONENTS:

Ident. No.	Description	Price / EURO
L2.39870.0	4-leaf barndoor, True Blue® (245 mm / 9.7")	90,00 €
L2.39900.0	8-leaf barndoor, True Blue® (245 mm / 9.7")	150,00 €
L2.79880.0	Snoot (245 mm / 9.7") with variable aperture	105,00 €
L2.79890.0	Filter Frame (230 mm / 9.1")	26,00 €
L2.37207.0	Spillring (230 mm / 9.1")	60,00 €
L2.37208.0	Frosted glass (242 mm / 9.5")	95,00 €
L2.79860.0	Set of 4 scrims (230 mm / 9.1")	90,00 €
L2.79860.A	Scrim, full single (230 mm / 9.1")	23,00 €
L2.79860.B	Scrim, full double (230 mm / 9.1")	24,00 €
L2.79860.C	Scrim, half single (230 mm / 9.1")	23,00 €

M8 (CONTINUE)

COMPONENTS:

Ident. No.	Description	Price / EURO
L2.79860.D	Scrim, half double (230 mm / 9.1")	24,00 €
L2.76248.0	Speed ring circular (9205) (245 mm / 9.7")	390,00 €
L2.70940.0	Chimera Lightbank Video Pro Plus "M"	565,00 €
L2.88717.0	Universal ARRI Cine Stand LS.4 (007BA)	156,00 €
L2.88679.0	Braked wheels set 110 for LS.4 Stand - wheels Ø 75 mm / 22 mm mount	79,00 €
L2.76989.0	ARRI Swivelling C Clamp (C150)	119,00 €
L2.76990.0	Safety cable (4 mm) 1 m, with "Kettbiner"	22,00 €
L2.0003872	Lamp DIS 800 W/SE G22 UV-B (Koto)	160,00 €
L2.37240.0	Lamp HMI 800 W/SEL G22 HR UV (Osram)	216,00 €



M18

Type of Lamphead:	**Open Face with Facetted Reflector, 1800 W**
Lamp Type:	**Metal Halide 1800 W/SE** **Metal Halide 1200 W/SE**
Lamp Base:	**G38**
Lens Diameter:	**250 mm**
Mounting:	**Spigot 28 mm**
Size (HxWxL) /	**567 x 387 x 388 mm /**
Packed Size:	**530 x 510 x 555 mm**
Packed Volume:	**0.15 m³**
Weight / Packed Weight:	**10.5 kg / 15.5 kg**
Protection Class / IP Rating:	**I / IP23**
Certifications:	**CE, CB, GS, cNTRLus**

OPEN FACE DAYLIGHT LAMPHEAD WITH MAX TECHNOLOGY®

(cable length 0.5 m, without barndoor)

Ident. No.	Description				Price / EURO
L1.37600.B	M18	MAN	blue/silver	International (VEAM)	3.050,00 €

BALLASTS:

Ident. No.	Description					Price / EURO
L2.76625.0	EB® 1200/1800	ALF, CCL	50/60/75 Hz	International (VEAM)	120/230 V~ Schuko-Plug	4.050,00 €
L2.76625KH	EB® 1200/1800	ALF, CCL	50/75/1000 Hz	International (VEAM)	120/230 V~ Schuko-Plug	4.840,00 €
L2.75600.0	Head-to-Ballast cable 575/800/1200/1800 W, 7 m, International connector (VEAM)					280,00 €
L2.75600.C	Head-to-Ballast cable 575/800/1200/1800 W, 15 m, International connector (VEAM)					355,00 €

COMPONENTS:

Ident. No.	Description	Price / EURO
L2.40950.0	4-leaf barndoor, True Blue® (344 mm / 13.5")	100,00 €
L2.40960.0	8-leaf barndoor, True Blue® (344 mm / 13.5")	210,00 €
L2.80975.0	Snoot (344 mm / 13.5") with variable aperture	120,00 €
L2.80970.0	Filter Frame (330 mm / 13.0")	38,00 €
L2.37670.0	Spillring (330 mm / 13.0")	75,00 €
L2.0001006	Frosted glass (330 mm / 13.0")	170,00 €

M18 (CONTINUE)

COMPONENTS:

Ident. No.	Description	Price / EURO
L2.80980.0	Set of 4 scrims (330 mm / 13.0")	135,00 €
L2.80980.A	Scrim, full single (330 mm / 13.0")	35,00 €
L2.80980.B	Scrim, full double (330 mm / 13.0")	40,00 €
L2.80980.C	Scrim, half single (330 mm / 13.0")	35,00 €
L2.80980.D	Scrim, half double (330 mm / 13.0")	40,00 €
L2.76247.0	Speed ring circular (9305) (343 mm / 13.5")	360,00 €
L2.89054.0	Chimera Lightbank Quartz Plus "S", incl. 3 front screens (8425)	700,00 €
L2.89055.0	Chimera Lightbank Quartz Plus "M", incl. 3 front screens (8435)	895,00 €
L2.76979.0	Universal ARRI Steel Stand LS.5 (126A)	198,00 €
L2.88679.0	Wheel set with brakes, Ø 75 mm / 22 mm mount (110)	79,00 €
L2.76989.0	ARRI Swivelling C Clamp (C150)	119,00 €
L2.76990.0	Safety cable (4 mm) 1 m, with "Kettbiner"	22,00 €
L2.77572.2	Conversion Kit from M18 to AS 18: PAR Reflector, three brackets and one top latch	190,00 €
L2.0003885	Lamp DIS 1200 W/SE G38 UV-B (Koto)	165,00 €
L2.89254.P	Lamp MSR 1200 W/SE G38 HR (Philips)	220,00 €
L2.89254L0	Lamp HMI 1200 W/SE G38 Longlife UV (Osram)	207,00 €
L2.0003884	Lamp DIS 1800 W/SE G38 (Koto)	270,00 €
L2.37590.0	Lamp HMI 1800 W/SE G38 UV (Osram)	365,00 €



M40

Type of Lamphead:	**Open Face with Facetted Reflector, 4000 W**
Lamp Type:	**Metal Halide 4000 W/SE**
	Metal Halide 2500 W/SE
Lamp Base:	**G38**
Lens Diameter:	**300 mm**
Mounting:	**Spigot 28 mm**
Size (HxWxL) /	**670 x 402 x 511 mm /**
Packed Size:	**660 x 595 x 665 mm**
Packed Volume:	**0.25 m³**
Weight / Packed Weight:	**19 kg / 23 kg**
Protection Class / IP Rating:	**I / IP23**
Certifications:	**CE, CB, GS, cNTRLus**

OPEN FACE DAYLIGHT LAMPHEAD WITH MAX TECHNOLOGY®

(cable length 0.5 m, without barndoor)

Ident. No.	Description				Price / EURO
L1.37400.B	M40	MAN	blue/silver	International (VEAM)	4.875,00 €

BALLASTS:

	Ident. No.	Description					Price / EURO
	L2.76640KH	EB® 2.5/4	ALF	50/75/1000 Hz	International (VEAM)	230 V~ bare ends	7.020,00 €
	L2.76675KH	EB® 2.5/4	ALF	60/75/1000 Hz	International (VEAM)	120/230 V~ bare ends	7.580,00 €
NEW	L2.76651KH	EB® 2.5/4	ALF, CCL, DMX	50/75/1000 Hz	International (VEAM)	230 V~, bare ends	7.600,00 €
	L2.76640.0	EB® 2.5/4	ALF	50/60/75 Hz	International (VEAM)	230 V~ bare ends	5.855,00 €
NEW	L2.76651.0	EB® 2.5/4	ALF, CCL, DMX	50/60/75 Hz	International (VEAM)	230 V~, bare ends	7.120,00 €
	L2.76641.0	EB® 2.5/4	ALF, DMX	50/60/75 Hz	International (VEAM)	230 V~ bare ends	6.240,00 €
	L2.76650.0	EB® 2.5/4	ALF, CCL	50/60/75 Hz	International (VEAM)	230 V~ bare ends	5.855,00 €
	L2.76646.0	EB® 2.5/4	DMX	50/60/75 Hz	International (VEAM)	120/230 V~ bare ends	5.950,00 €
	L2.75620.0	Head-to-Ballast cable 2500/4000 W, 7 m, International connector (VEAM)					290,00 €
	L2.75620.C	Head-to-Ballast cable 2500/4000 W, 15 m, International connector (VEAM)					390,00 €

M40 (CONTINUE)

COMPONENTS:

Ident. No.	Description	Price / EURO
L2.41200.0	4-leaf barndoor, True Blue® (413 mm / 16.3")	120,00 €
L2.81210.0	8-leaf barndoor (413 mm / 16.3")	230,00 €
L2.81225.0	Snoot (413 mm / 16.3") with variable aperture	245,00 €
L2.81220.0	Filter Frame (400 mm / 15.8")	40,00 €
L2.37305.0	Spillring (400 mm / 15.8")	100,00 €
L2.81230.0	Set of 4 scrims (400 mm / 15.8")	155,00 €
L2.81230.A	Scrim, full single (400 mm / 15.8")	40,00 €
L2.81230.B	Scrim, full double (400 mm / 15.8")	45,00 €
L2.81230.C	Scrim, half single (400 mm / 15.8")	40,00 €
L2.81230.D	Scrim, half double (400 mm / 15.8")	45,00 €
L2.89062.0	Speed ring circular (9365) (411 mm / 16.2")	420,00 €
L2.89055.0	Chimera Lightbank Quartz Plus "M", incl. 3 front screens (8435)	895,00 €
L2.8800561	ARRI Wind-up Stand LS.6 (083NWA)	565,00 €
L2.76959.0	Wheel set with brakes, Ø 75 mm / M10 mount with brakes (104)	70,00 €
L2.88706.0	Wheel set with brakes, Ø 125 mm / M10 mount with brakes (251)	114,00 €
L2.88096.0	Wheel set with brakes, Ø 160 mm / M10 mount with brakes (374)	268,00 €
L2.76989.0	ARRI Swivelling C Clamp (C150)	119,00 €
L2.80864.0	Safety cable (5 mm) 1 m, with "Kettbiner"	20,00 €
L2.0003883	Lamp DIS 2500 W/SE G38 UV-B (Koto)	250,00 €
L2.89255.0	Lamp HMI 2500 W/SE XS G38 (Osram)	355,00 €
L2.0003882	Lamp DIS 4000 W/SE G38 UV-B (Koto)	380,00 €
L2.89256.0	Lamp HMI 4000 W/SE XS G38 (Osram)	495,00 €



M90

Type of Lamphead:	**Open Face with Facetted Reflector, 9000 W**
Lamp Type:	**Metal Halide 9000 W/SE** **Metal Halide 6000 W/SE**
Lamp Base:	**GX38**
Lens Diameter:	**500 mm**
Mounting:	**Spigot 28 mm**
Size (HxWxL) /	**947 x 713 x 716 mm /**
Packed Size:	**930 x 790 x 910 mm**
Packed Volume:	**0,66 m³**
Weight / Packed Weight:	**40.0 kg / 55.0 kg**
Protection Class / IP Rating:	**I / IP23**
Certifications:	**CE, CB, GS, cNTRLus**

OPEN FACE DAYLIGHT LAMPHEAD WITH MAX TECHNOLOGY®

(cable length 0.5 m, without barndoor)

Ident. No.	Description				Price / EURO
L1.37480.B	M90	MAN	blue/silver	International (VEAM)	8.990,00 €

BALLASTS:

Ident. No.	Description					Price / EURO
L2.76181KH	EB® 6/9	ALF, CCL, DMX	50/75/1000 Hz	International (VEAM)	230 V~ bare ends	11.650,00 €
L2.76181.0	EB® 6/9	ALF, CCL, DMX	50/60/75 Hz	International (VEAM)	230 V~ bare ends	10.500,00 €
L2.77940.B	Head-to-Ballast cable 6000/9000 W, 10 m, International connector (VEAM)					750,00 €
L2.77940.A	Head-to-Ballast cable 6000/9000 W, 15 m, International connector (VEAM)					885,00 €

COMPONENTS:

Ident. No.	Description	Price / EURO
L2.37560.0	4-leaf barndoor (584 mm / 23.0")	540,00 €
L2.37561.0	Spillring (571 mm / 22.5")	120,00 €
L2.37563.0	Set of 4 scrims (571 mm / 22.5")	290,00 €
L2.37563.A	Scrim, full single (571 mm / 22.5")	70,00 €
L2.37563.B	Scrim, full double (571 mm / 22.5")	75,00 €
L2.37563.C	Scrim, half single (571 mm / 22.5")	70,00 €
L2.37563.D	Scrim, half double (571 mm / 22.5")	75,00 €
L2.37475.0	Speed ring circular (9465) (581 mm / 22.9")	400,00 €
L2.0003879	Lamp DIS 9000 W/SE G38 (Koto)	1.850,00 €
L2.37482.0	Lamp HMI 9000 W/SE XS GX38 (Osram)	2.515,00 €



ARRIMAX® 18/12

Type of Lamphead:	**Open Face with Facetted Reflector, 18000 W**
Lamp Type:	**Metal Halide 18000 W/SE** **Metal Halide 12000 W/SE**
Lamp Base:	**GX51 / GX38**
Lens Diameter:	**630 mm**
Mounting:	**Spigot 28 mm**
Size (HxWxL) /	**1051 x 784 x 942 mm /**
Packed Size:	**1135 x 1050 x 1170 mm**
Packed Volume:	**1.4 m³**
Weight / Packed Weight:	**65.0 kg / 101.0 kg (with pallet)**
Protection Class / IP Rating:	**I / IP23**
Certifications:	**CE, CB, GS, cNTRLus**

OPEN FACE DAYLIGHT LAMPHEAD WITH MAX TECHNOLOGY®

(cable length 0.5 m, without barndoor)

Ident. No.	Description					Price / EURO
L1.37950.B	ARRIMAX® 18/12	MAN	blau/silber	International (VEAM)		16.990,00 €

BALLASTS:

Ident. No.	Description					Price / EURO
L2.76290.0	EB® 12/18	ALF, with trolley	50/60/75 Hz	International (VEAM)	230 V~ bare ends	13.655,00 €
L2.76295.0	EB® 12/18	ALF, DMX, with trolley	50/60/75 Hz	International (VEAM)	230 V~ bare ends	14.630,00 €
L2.82294.0	Head-to-Ballast/Dimmer cable 12/18/24 kW, 15 m, International connector (VEAM)					970,00 €
L2.82294.A	Head-to-Ballast/Dimmer cable 12/18/24 kW, 20 m, International connector (VEAM)					1.240,00 €

COMPONENTS:

Ident. No.	Description	Price / EURO
L2.71100.0	4-leaf barndoor (740 mm / 29.1")	635,00 €
L2.37941.0	Snoot (740 mm / 29.1") with variable frame	715,00 €
L2.71115.0	Set of 4 scrims (740 mm / 29.1")	325,00 €
L2.71115.A	Scrim, full single (740 mm / 29.1")	80,00 €
L2.71115.B	Scrim, full double (740 mm / 29.1")	85,00 €
L2.71115.C	Scrim, half single (740 mm / 29.1")	80,00 €
L2.71115.D	Scrim, half double (740 mm / 29.1")	85,00 €
L2.37940.0	Spot reflector for ARRIMAX® 18/12, 8° - 15° Half Peak Angle	475,00 €

ARRIMAX® 18/12 (CONTINUE)

COMPONENTS:

Ident. No.	Description	Price / EURO
L2.0003613	Motorized Yoke BigBee, built-in DMX module	21.900,00 €
L2.0003614	Motorized Yoke BigBee Focus-unit	3.200,00 €
L2.89259.G	Lamp CSR 12000 W/SE G38 HR (GE)	3.200,00 €
L2.89261.0	Lamp HMI 12000 W/SE XS GX38 (Osram)	3.650,00 €
L2.0003877	Lamp DIS 18000 W/SE G51 (Koto)	2.950,00 €
L2.89262.0	Lamp HMI 18000 W/SE XS GX51 (Osram)	3.850,00 €

ARRISUN® 2



Type of Lamphead:	**PAR, 200 W**
Lamp Type:	**Metal Halide 200 W/SE**
Lamp Base:	**GZY 9,5**
Lens Diameter:	**135 mm**
Mounting:	**Socket 16 mm**
Size (HxWxL) /	**250 x 204 x 267 mm /**
Packed Size:	**290 x 225 x 260 mm**
Packed Volume:	**0.017 m³**
Weight / Packed Weight:	**2.3 kg / 2.7 kg**
Protection Class / IP Rating:	**I / IP23**
Certifications:	**CE**

DAYLIGHT PAR LIGHTS

(cable length 1 m, without barndoor)

Ident. No.	Description				Price / EURO
L1.77820.B	ARRISUN® 2	MAN	blue/silver	Amphenol	1.345,00 €

BALLASTS:

Ident. No.	Description					Price / EURO
L2.76115.0	EB® 200	ALF, IP23, w/o fan	200 Hz	Amphenol	120/230 V~ Schuko-Plug	1.255,00 €
L2.76013.B	EB® 125/200	ALF	200 Hz	Binder Amphenol	120/230 V~ Appliance inlet with Schuko-Plug	1.075,00 €
L2.76040.B	EBB 125/200		150 Hz	Binder Amphenol	20-36 V⎓ XLR 4-Plug	1.075,00 €
L2.76270.B	EBB 200/400		110 Hz	Amphenol International (VEAM)	20-36 V⎓ 2 x XLR 4-Plug	1.805,00 €
L2.73372.0	Head-to-Ballast cable 200 W, 7 m, Amphenol					200,00 €

COMPONENTS:

Ident. No.	Description	Price / EURO
L2.79470.0	4-leaf barndoor (168 mm / 6.6")	59,00 €
L2.79471.0	4-leaf barndoor, black/silver (168 mm / 6.6")	115,00 €
L2.79500.0	8-leaf barndoor (168 mm / 6.6")	110,00 €

ARRISUN® 2 (CONTINUE)

COMPONENTS:

Ident. No.	Description	Price / EURO
L2.79460.0	Set of 4 scrims (168 mm / 6.6")	75,00 €
L2.79460.A	Scrim, full single (168 mm / 6.6")	19,00 €
L2.79460.B	Scrim, full double (168 mm / 6.6")	22,00 €
L2.79460.C	Scrim, half single (168 mm / 6.6")	19,00 €
L2.79460.D	Scrim, half double (168 mm / 6.6")	22,00 €
L2.89068.0	Speed ring circular (9670) (168 mm / 6.6")	115,00 €
L2.89074.0	Speed ring circular metal (9670AL) (168 mm / 6.6")	150,00 €
L2.89069.0	Speed ring circular (9672) (168 mm / 6.6")	150,00 €
L2.70844.0	Chimera Lightbank Video Pro Plus "S", incl. 3 front screens (8125)	360,00 €
L0.77824.0	5 DROP-IN lens set (130 mm / 5.1") (spot, narrow flood, flood, super flood, super flood frosted)	700,00 €
L0.77825.0	4 DROP-IN lens set (130 mm / 5.1") (spot, narrow flood, flood, super flood)	560,00 €
L2.77826.0	DROP-IN lens, spot, blue (130 mm / 5.1")	140,00 €
L2.77828.0	DROP-IN lens, narrow flood, small rectangle, black (130 mm / 5.1")	140,00 €
L2.77830.0	DROP-IN lens, flood, large rectangle, green (130 mm / 5.1")	140,00 €
L2.77832.0	DROP-IN lens, super flood, honeycomb, red (130 mm / 5.1")	140,00 €
L2.77834.0	DROP-IN lens, super flood frosted, honeycomb, silver (130 mm / 5.1")	140,00 €
L2.77818.0	Lens bag for max. 5 lenses up to Ø 235 mm, empty	30,00 €
L2.77065.0	Case for 1 x ARRISUN® 2, ballast, lenses & accessories (47 x 34 x 35 cm)	375,00 €
L2.76976.0	Medium ARRI Kit Stand LS.2 (050A)	76,00 €
L2.88679.0	Wheel set with brakes, Ø 75 mm / 22 mm mount (110)	79,00 €
L2.76985.0	ARRI Super Clamp (035)	28,00 €
L2.76100.0	ARRI Super Clamp with plate for EB® / EBB	85,00 €
L2.73490.0	Universal Clamp with spigot 16 mm (camera mount)	125,00 €
L2.74144.0	Ballast mount bracket with 16 mm socket	65,00 €
L2.76986.0	Stud 16 mm with thread 3/8" (036-38), plugs into Superclamp (035)	6,00 €
L2.76809.0	Safety cable (3 mm) 0.6 m, with "Kettbiner"	17,00 €
L2.0003876	Lamp DIS 200 W/SE GZY 9,5 UV-B (Koto)	130,00 €
L2.89251.0	Lamp HMI 200 W/SE GZY 9,5 UV (Osram)	160,00 €

ARRISUN® 5



Type of Lamphead:	**PAR, 575 W**
Lamp Type:	**Metal Halide 575 W/SE**
Lamp Base:	**G22**
Lens Diameter:	**175 mm**
Mounting:	**Spigot 28 mm**
Size (HxWxL) /	**358 x 272 x 310 mm /**
Packed Size:	**340 x 490 x 380 mm**
Packed Volume:	**0.06 m³**
Weight / Packed Weight:	**3.8 kg / 6.3 kg**
Protection Class / IP Rating:	**I / IP23**
Certifications:	**CE**

DAYLIGHT PAR LIGHTS

(cable length 0.5 m, without barndoor)

Ident. No.	Description				Price / EURO
L1.77850.B	ARRISUN® 5	MAN	blue/silver	International (VEAM)	2.010,00 €
L1.77850.F	ARRISUN® 5	MAN	blue/silver	Schaltbau (GTV-Standard)	2.010,00 €

BALLASTS:

Ident. No.	Description					Price / EURO
L2.76425KH	EB® 575/1200	ALF	50/75/1000 Hz	International (VEAM)	120/230 V~ Schuko-Plug	3.515,00 €
L2.76125.0	EB® 575/1200		50/60/75 Hz	International (VEAM)	120/230 V~ Schuko-Plug	2.635,00 €
L2.76126.0	EB® 575/1200	DMX	50/60/75 Hz	International (VEAM)	120/230 V~ Schuko-Plug	3.025,00 €
L2.76425.0	EB® 575/1200	ALF	50/60/75 Hz	International (VEAM)	120/230 V~ Schuko-Plug	2.925,00 €
L2.76426.0	EB® 575/1200	ALF, DMX	50/60/75 Hz	International (VEAM)	120/230 V~ Schuko-Plug	3.315,00 €
L2.76427.0	EB® 575/1200	ALF	50/60/75 Hz	Schaltbau	120/230 V~ Schuko-Plug	2.925,00 €
L2.76260.0	EB® 400/575	ALF	110 Hz	International (VEAM)	120/230 V~ Appliance inlet with Schuko-Plug	1.850,00 €
L2.76262.0	EB® 400/575	ALF	110 Hz	Schaltbau	120/230 V~ Appliance inlet with Schuko-Plug	1.850,00 €

ARRISUN® 5 (CONTINUE)

BALLASTS:

Ident. No.	Description	Price / EURO
L2.75600.0	Head-to-Ballast cable 575/800/1200/1800 W, 7 m, International connector (VEAM)	280,00 €
L2.75600.F	Head-to-Ballast cable 575/1200/1800 W, 7 m, Schaltbau / Extension Cable EVENT 1200/1800 W	280,00 €
L2.75600.C	Head-to-Ballast cable 575/800/1200/1800 W, 15 m, International connector (VEAM)	355,00 €
L2.75600.E	Head-to-Ballast cable 575/1200/1800 W, 15 m, Schaltbau / Extension Cable EVENT 1200/1800 W	355,00 €
L2.76339.0	Adapter for AS5 Event on regular (VEAM) ballasts	140,00 €

COMPONENTS:

Ident. No.	Description	Price / EURO
L2.39670.0	4-leaf barndoor, True Blue® (197 mm / 7.8")	80,00 €
L2.39700.0	8-leaf barndoor, True Blue® (197 mm / 7.8")	120,00 €
L2.79660.0	Set of 4 scrims (197 mm / 7.8")	90,00 €
L2.79660.A	Scrim, full single (197 mm / 7.8")	23,00 €
L2.79660.B	Scrim, full double (197 mm / 7.8")	25,00 €
L2.79660.C	Scrim, half single (197 mm / 7.8")	23,00 €
L2.79660.D	Scrim, half double (197 mm / 7.8")	25,00 €
L2.76246.0	Speed ring circular (9190) (197 mm / 7.8")	180,00 €
L2.89060.0	Speed ring circular (9192) (197 mm / 7.8")	180,00 €
L2.70940.0	Chimera Lightbank Video Pro Plus "M", incl. 3 front screens (8135)	565,00 €
L2.89053.0	Chimera Lightbank Daylite Junior Plus "S", incl. 3 front screens (8225)	475,00 €
L0.77862.0	5 DROP-IN lens set (175 mm / 6.9") (spot, narrow flood, flood, super flood, super flood frosted)	705,00 €
L0.77863.0	4 DROP-IN lens set (175 mm / 6.9") (spot, narrow flood, flood, super flood)	565,00 €
L2.77864.0	DROP-IN lens, spot, blue (175 mm / 6.9")	140,00 €
L2.77866.0	DROP-IN lens, narrow flood, small rectangle, black (175 mm / 6.9")	140,00 €
L2.77868.0	DROP-IN lens, flood, large rectangle, green (175 mm / 6.9")	140,00 €
L2.77870.0	DROP-IN lens, super flood, honeycomb, red (175 mm / 6.9")	145,00 €
L2.77872.0	DROP-IN lens, super flood frosted, honeycomb, silver (175 mm / 6.9")	140,00 €
L2.77853.0	Case for 1 x ARRISUN® 5, ballast, lenses & accessories (45 x 32 x 47 cm)	385,00 €
L2.88717.0	Universal ARRI Cine Stand LS.4 (007BA)	156,00 €
L2.88679.0	Wheel set with brakes, Ø 75 mm / 22 mm mount (110)	79,00 €
L2.76989.0	ARRI Swivelling C Clamp (C150)	119,00 €
L2.76986.0	Stud 16 mm with thread 3/8" (036-38), plugs into Superclamp (035)	6,00 €
L2.76990.0	Safety Cable (4 mm) 1 m, with "Kettbiner"	22,00 €
L2.0003874	Lamp DIS 575 W/SE G22 UV-B (Koto)	110,00 €
L2.89253L0	Lamp HMI 575 W/SE G22 Longlife UV (Osram)	165,00 €



AS 18

Type of Lamphead:	**PAR, 1800 W**
Lamp Type:	**Metal Halide 1800 W/SE** **Metal Halide 1200 W/SE**
Lamp Base:	**G38**
Lens Diameter:	**250 mm**
Mounting:	**Spigot 28 mm**
Size (HxWxL) /	**595 x 387 x 416 mm /**
Packed Size:	**525 x 515 x 555 mm**
Packed Volume:	**0.15 m³**
Weight / Packed Weight:	**10.5 kg / 12.9 kg**
Protection Class / IP Rating:	**I / IP23**
Certifications:	**CE, CB, GS, cNTRLus**

DAYLIGHT PAR LIGHTS

(cable length 0.5 m, without barndoor)

Ident. No.	Description				Price / EURO
L1.37570.B	AS 18	MAN	blue/silver	International (VEAM)	3.050,00 €
L1.37570.F	AS 18	MAN	blue/silver	Schaltbau (GTV-Standard)	3.050,00 €

BALLASTS:

Ident. No.	Description					Price / EURO
L2.76625KH	EB® 1200/1800	ALF, CCL	50/75/1000 Hz	International (VEAM)	120/230 V~ Schuko-Plug	4.840,00 €
L2.76625.0	EB® 1200/1800	ALF, CCL	50/60/75 Hz	International (VEAM)	120/230 V~ Schuko-Plug	4.050,00 €
L2.75600.0	Head-to-Ballast cable 575/800/1200/1800 W, 7 m, International connector (VEAM)					280,00 €
L2.75600.F	Head-to-Ballast cable 575/1200/1800 W, 7 m, Schaltbau / Extension Cable EVENT 1200/1800 W					280,00 €
L2.75600.C	Head-to-Ballast cable 575/800/1200/1800 W, 15 m, International connector (VEAM)					355,00 €
L2.75600.E	Head-to-Ballast cable 575/1200/1800 W, 15 m, Schaltbau / Extension Cable EVENT 1200/1800 W					355,00 €

COMPONENTS:

Ident. No.	Description	Price / EURO
L2.40950.0	4-leaf barndoor, True Blue® (344 mm / 13.5")	100,00 €
L2.40960.0	8-leaf barndoor, True Blue® (344 mm / 13.5")	210,00 €

AS 18 (CONTINUE)

COMPONENTS:

Ident. No.	Description	Price / EURO
L2.80980.0	Set of 4 scrims (330 mm / 13.0")	135,00 €
L2.80980.A	Scrim, full single (330 mm / 13.0")	35,00 €
L2.80980.B	Scrim, full double (330 mm / 13.0")	40,00 €
L2.80980.C	Scrim, half single (330 mm / 13.0")	35,00 €
L2.80980.D	Scrim, half double (330 mm / 13.0")	40,00 €
L2.76247.0	Speed ring circular (9305) (343 mm / 13.5")	360,00 €
L2.89054.0	Chimera Lightbank Quartz Plus "S", incl. 3 front screens (8425)	700,00 €
L2.89055.0	Chimera Lightbank Quartz Plus "M", incl. 3 front screens (8435)	895,00 €
L0.76817.0	5 DROP-IN lens set (250 mm / 9.8"), incl. case (spot, narrow flood, flood, super flood, super flood frosted)	1.250,00 €
L0.76818.0	4 DROP-IN lens set (250 mm / 9.8"), incl. case (spot, narrow flood, flood, super flood)	1.060,00 €
L2.76821.0	DROP-IN lens, spot, blue (250 mm / 9.8")	190,00 €
L2.76822.0	DROP-IN lens, narrow flood, small rectangle, black (250 mm / 9.8")	190,00 €
L2.76823.0	DROP-IN lens, flood, large rectangle, green (250 mm / 9.8")	190,00 €
L2.76824.0	DROP-IN lens, super flood, honeycomb, red (250 mm / 9.8")	190,00 €
L2.76825.0	DROP-IN lens, super flood frosted, honeycomb, silver (250 mm / 9.8")	190,00 €
L2.76827.0	Lens case for 5 lenses, empty (36 x 21 x 41 cm)	300,00 €
L2.76979.0	Universal ARRI Steel Stand LS.5 (126A)	198,00 €
L2.88679.0	Wheel set with brakes, Ø 75 mm / 22 mm mount (110)	79,00 €
L2.76989.0	ARRI Swivelling C Clamp (C150)	119,00 €
L2.76990.0	Safety cable (4 mm) 1 m, with "Kettbiner"	22,00 €
L2.37682.2	Conversion Kit from AS18 to M18: MAX Reflector, three brackets and one top latch	190,00 €
L2.0003885	Lamp DIS 1200 W/SE G38 UV-B (Koto)	165,00 €
L2.89254.P	Lamp MSR 1200 W/SE G38 HR (Philips)	220,00 €
L2.89254L0	Lamp HMI 1200 W/SE G38 Longlife UV (Osram)	207,00 €
L2.0003884	Lamp DIS 1800 W/SE G38 (Koto)	270,00 €
L2.37590.0	Lamp HMI 1800 W/SE XS G38 UV (Osram)	365,00 €



AS 40

Type of Lamphead:	**PAR, 4000 W**
Lamp Type:	**Metal Halide 4000 W/SE** **Metal Halide 2500 W/SE**
Lamp Base:	**G38**
Lens Diameter:	**300 mm**
Mounting:	**Spigot 28 mm**
Size (HxWxL) /	**723 x 471 x 590 mm /**
Packed Size:	**650 x 600 x 670 mm**
Packed Volume:	**0.26 m³**
Weight / Packed Weight:	**19 kg / 24 kg**
Protection Class / IP Rating:	**I / IP23**
Certifications:	**CE, CB, GS, cNTRLus**

DAYLIGHT PAR LIGHTS

(cable length 0.6 m, without barndoor)

Ident. No.	Description				Price / EURO
L1.37300.B	AS 40	MAN	blue/silver	International (VEAM)	4.875,00 €
L1.37300.F	AS 40	MAN	blue/silver	Schaltbau (GTV-Standard)	4.875,00 €

BALLASTS:

Ident. No.	Description					Price / EURO
L2.76640KH	EB® 2.5/4	ALF	50/75/1000 Hz	International (VEAM)	230 V~ bare ends	7.020,00 €
L2.76675KH	EB® 2.5/4	ALF	60/75/1000 Hz	International (VEAM)	120/230 V~ bare ends	7.580,00 €
L2.76640.0	EB® 2.5/4	ALF	50/60/75 Hz	International (VEAM)	230 V~ bare ends	5.855,00 €
L2.76641.0	EB® 2.5/4	ALF, DMX	50/60/75 Hz	International (VEAM)	230 V~ bare ends	6.240,00 €
L2.76650.0	EB® 2.5/4	ALF, CCL	50/60/75 Hz	International (VEAM)	230 V~ bare ends	5.855,00 €
L2.76646.0	EB® 2.5/4	DMX	50/60/75 Hz	International (VEAM)	120/230 V~ bare ends	5.950,00 €
L2.75620.0	Head-to-Ballast cable 2500/4000 W, 7 m, International connector (VEAM)					290,00 €
L2.75620.F	Head-to-Ballast cable 2500/4000 W, 7 m, Schaltbau					300,00 €
L2.75620.C	Head-to-Ballast cable 2500/4000 W, 15 m, International connector (VEAM)					390,00 €
L2.75620.E	Head-to-Ballast cable 2500/4000 W, 15 m, Schaltbau					390,00 €

AS 40 (CONTINUE)

COMPONENTS:

Ident. No.	Description	Price / EURO
L2.41200.0	4-leaf barndoor, True Blue® (413 mm / 16.3")	120,00 €
L2.81210.0	8-leaf barndoor (413 mm / 16.3")	230,00 €
L2.81230.0	Set of 4 scrims (400 mm / 15.8")	155,00 €
L2.81230.A	Scrim, full single (400 mm / 15.8")	40,00 €
L2.81230.B	Scrim, full double (400 mm / 15.8")	45,00 €
L2.81230.C	Scrim, half single (400 mm / 15.8")	40,00 €
L2.81230.D	Scrim, half double (400 mm / 15.8")	45,00 €
L2.89062.0	Speed ring circular (9365) (411 mm / 16.2")	420,00 €
L2.89055.0	Chimera Lightbank Quartz Plus "M", incl. 3 front screens (8435)	895,00 €
L0.76864.0	5 DROP-IN lens set (300 mm / 11.8"), incl. case (spot, narrow flood, flood, super flood, super flood frosted)	1.545,00 €
L0.76865.0	4 DROP-IN lens set (300 mm / 11.8"), incl. case (spot, narrow flood, flood, super flood)	1.300,00 €
L2.76867.0	DROP-IN lens, spot, blue (300 mm / 11.8")	245,00 €
L2.76868.0	DROP-IN lens, narrow flood, small rectangle, black (300 mm / 11.8")	245,00 €
L2.76869.0	DROP-IN lens, flood, large rectangle, green (300 mm / 11.8")	245,00 €
L2.76870.0	DROP-IN lens, super flood, honeycomb, red (300 mm / 11.8")	245,00 €
L2.76871.0	DROP-IN lens, super flood frosted, honeycomb, silver (300 mm / 11.8")	245,00 €
L2.77483.0	Lens case for 5 lenses, empty (47 x 34 x 49 cm)	320,00 €
L2.8800561	ARRI Wind-up Stand LS.6 (083NWA)	565,00 €
L2.76959.0	Wheel set with brakes, Ø 75 mm / M10 mount with brakes (104)	70,00 €
L2.88706.0	Wheel set with brakes, Ø 125 mm / M10 mount with brakes (251)	114,00 €
L2.88096.0	Wheel set with brakes, Ø 160 mm / M10 mount with brakes (374)	268,00 €
L2.76989.0	ARRI Swivelling C Clamp (C150)	119,00 €
L2.80864.0	Safety cable (5 mm) 1 m, with "Kettbiner"	20,00 €
L2.0003883	Lamp DIS 2500 W/SE G38 UV-B (Koto)	250,00 €
L2.89255.0	Lamp HMI 2500 W/SE XS G38 (Osram)	355,00 €
L2.0003882	Lamp DIS 4000 W/SE G38 UV-B (Koto)	380,00 €
L2.89256.0	Lamp HMI 4000 W/SE XS G38 (Osram)	495,00 €



ARRISUN® 60

Type of Lamphead:	**PAR, 6000 W**
Lamp Type:	**Metal Halide 6000 W/SE**
Lamp Base:	**GX38**
Lens Diameter:	**420 mm**
Mounting:	**Spigot 28 mm**
Size (HxWxL) /	**872 x 562 x 680 mm /**
Packed Size:	**695 x 725 x 780 mm**
Packed Volume:	**0.39 m³**
Weight / Packed Weight:	**27.0 kg / 32.5 kg**
Protection Class / IP Rating:	**I / IP23**
Certifications:	**CE, CB, GS, cNTRLus**

DAYLIGHT PAR LIGHTS

(cable length 0.7 m, without barndoor)

Ident. No.	Description					Price / EURO	
L1.77480.B	ARRISUN® 60	MAN	blue/silver	International (VEAM)		6.465,00	€

BALLASTS:

Ident. No.	Description					Price / EURO	
L2.76181KH	EB® 6/9	ALF, CCL, DMX	50/75/1000 Hz	International (VEAM)	230 V~ bare ends	11.650,00	€
L2.76193.0	EB® 6000 Baby	ALF	50/60/75 Hz	International (VEAM)	230 V~ bare ends	8.780,00	€
L2.76172.0	EB® 6/12	ALF	50/60/75 Hz	International (VEAM)	120 V~ (only 6kW) / 230 V~ bare ends	10.630,00	€
L2.76182.0	EB® 6/12	ALF, DMX	50/60/75 Hz	International (VEAM)	120 V~ (only 6kW) / 230 V~ bare ends	11.020,00	€
L2.77940.0	Head-to-Ballast cable 6000/9000 W, 7 m, International connector (VEAM)					615,00	€
L2.77940.A	Head-to-Ballast cable 6000/9000 W, 15 m, International connector (VEAM)					885,00	€

ARRISUN® 60 (CONTINUE)

COMPONENTS:

Ident. No.	Description	Price / EURO
L2.82150.0	4-leaf barndoor (510 mm / 20.1")	410,00 €
L2.82160.0	Set of 4 scrims (495 mm / 19.5")	205,00 €
L2.82160.A	Scrim, full single (495 mm / 19.5")	55,00 €
L2.82160.B	Scrim, full double (495 mm / 19.5")	55,00 €
L2.82160.C	Scrim, half single (495 mm / 19.5")	55,00 €
L2.82160.D	Scrim, half double (495 mm / 19.5")	55,00 €
L2.89063.0	Speed ring circular (9435) (508 mm / 20.0")	420,00 €
L2.89055.0	Chimera Lightbank Quartz Plus "M", incl. 3 front screens (8435)	895,00 €
L2.89056.0	Chimera Lightbank Quartz Plus "L", incl. 3 front screens (8445)	1.430,00 €
L2.89058.0	Chimera Lightbank Daylite Plus "M", incl. 3 front screens (8635)	1.120,00 €
L2.89059.0	Chimera Lightbank Daylite Plus "L", incl. 3 front screens (8645)	1.700,00 €
L0.76885.0	4 DROP-IN lens set (420 mm / 16.5"), incl. case (spot, narrow flood, flood, super flood)	1.980,00 €
L0.76882.0	5 DROP-IN lens set (420 mm / 16.5"), incl. case (spot, narrow flood, flood, super flood, super flood frosted)	2.350,00 €
L2.76887.0	DROP-IN lens, spot, blue (420 mm / 16.5")	370,00 €
L2.76888.0	DROP-IN lens, narrow flood, small rectangle, black (420 mm / 16.5")	370,00 €
L2.76889.0	DROP-IN lens, flood, large rectangle, green (420 mm / 16.5")	370,00 €
L2.76890.0	DROP-IN lens, super flood, honeycomb, red (420 mm / 16.5")	370,00 €
L2.76891.0	DROP-IN lens, super flood frosted, honeycomb, silver (420 mm / 16.5")	370,00 €
L2.77932.0	Lens case for 5 lenses up to Ø 495 mm, empty (66 x 35 x 69 cm), expandable for Ø 600 mm lenses	500,00 €
L2.8800561	ARRI Wind-up Stand LS.6 (083NWA)	565,00 €
L2.76959.0	Wheel set with brakes, Ø 75 mm / M10 mount with brakes (104)	70,00 €
L2.88706.0	Wheel set with brakes, Ø 125 mm / M10 mount with brakes (251)	114,00 €
L2.88096.0	Wheel set with brakes, Ø 160 mm / M10 mount with brakes (374)	268,00 €
L2.76989.0	ARRI Swivelling C Clamp (C150)	119,00 €
L2.80866.0	Safety Cable (6 mm) 1 m, with "Kettbiner"	21,00 €
L2.0003881	Lamp DIS 6000 W/SE G38 UV-B (Koto)	1.300,00 €
L2.89257.0	Lamp HMI 6000 W/SE G38 (Osram)	1.725,00 €



ARRISUN® 120

Type of Lamphead:	**PAR, 12000 W**
Lamp Type:	**Metal Halide 12000 W/SE**
Lamp Base:	**GX38**
Lens Diameter:	**500 mm**
Mounting:	**Spigot 28 mm**
Size (HxWxL) /	**948 x 760 x 850 mm /**
Packed Size:	**875 x 815 x 950 mm**
Packed Volume:	**0.67 m³**
Weight / Packed Weight:	**47 kg / 63.0 kg (with pallet)**
Protection Class / IP Rating:	**I / IP23**
Certifications:	**CE, CB, GS, cNTRLus**

DAYLIGHT PAR LIGHTS

(cable length 1 m, without barndoor)

Ident. No.	Description				Price / EURO
L1.77890.B	ARRISUN® 120	MAN	blue/silver	International (VEAM)	11.660,00 €

BALLASTS:

Ident. No.	Description					Price / EURO
L2.76172HS	EB® 6/12	ALF	60/75/300 Hz	International (VEAM)	120 V~ (only 6kW) / 230 V~ bare ends	11.705,00 €
L2.76172.0	EB® 6/12	ALF	50/60/75 Hz	International (VEAM)	120 V~ (only 6kW) / 230 V~ bare ends	10.630,00 €
L2.76182.0	EB® 6/12	ALF, DMX	50/60/75 Hz	International (VEAM)	120 V~ (only 6kW) / 230 V~ bare ends	11.020,00 €
L2.76290.0	EB® 12/18	ALF, with trolley	50/60/75 Hz	International (VEAM)	230 V~ bare ends	13.655,00 €
L2.76295.0	EB® 12/18	ALF, DMX, with trolley & indication of lamp power	50/60/75 Hz	International (VEAM)	230 V~ bare ends	14.630,00 €
L2.82294.0	Head-to-Ballast/Dimmer cable 12/18/24 kW, 15 m, International connector (VEAM)					970,00 €
L2.82294.A	Head-to-Ballast/Dimmer cable 12/18/24 kW, 20 m, International connector (VEAM)					1.240,00 €

ARRISUN® 120 (CONTINUE)

COMPONENTS:

Ident. No.	Description	Price / EURO
L2.79065.0	4-leaf barndoor (580 mm / 22.8")	540,00 €
L2.70634.0	Set of 4 scrims (530 mm / 20.9")	270,00 €
L2.70634.A	Scrim, full single (530 mm / 20.9")	70,00 €
L2.70634.B	Scrim, full double (530 mm / 20.9")	75,00 €
L2.70634.C	Scrim, half single (530 mm / 20.9")	70,00 €
L2.70634.D	Scrim, half double (530 mm / 20.9")	75,00 €
L2.89077.0	Speed ring circular (9445) (530 mm / 20.9")	420,00 €
L2.89056.0	Chimera Lightbank Quartz Plus "L", incl. 3 front screens (8445)	1.430,00 €
L0.77920.0	5 DROP-IN lens set (500 mm / 19.7"), incl. case (spot, narrow flood, flood, super flood, super flood frosted)	3.840,00 €
L0.77921.0	4 DROP-IN lens set (500 mm / 19.7"), incl. case (spot, narrow flood, flood, super flood)	3.140,00 €
L2.77923.0	DROP-IN lens, spot, blue (500 mm / 19.7")	655,00 €
L2.77926.0	DROP-IN lens, narrow flood, small rectangle, black (500 mm / 19.7")	655,00 €
L2.77924.0	DROP-IN lens, flood, large rectangle, green (500 mm / 19.7")	655,00 €
L2.77925.0	DROP-IN lens, super flood, honeycomb, red (500 mm / 19.7")	655,00 €
L2.77928.0	DROP-IN lens, super flood frosted, honeycomb, silver (500 mm / 19.7")	700,00 €
L2.77922.0	Lens case for 5 lenses, empty (66 x 35 x 69 cm)	520,00 €
L2.89259.G	Lamp CSR 12000 W/SE G38 HR (GE)	3.200,00 €
L2.89261.0	Lamp HMI 12000 W/SE XS GX38 (Osram)	3.650,00 €



ARRISUN® 5 EVENT

Type of Lamphead:	**PAR, 575 W**
Lamp Type:	**Metal Halide 575 W/SE**
Lamp Base:	**G22**
Lens Diameter:	**180 mm**
Mounting:	**Spigot 16 mm**
Size (HxWxL) /	**344 x 259 x 295 mm /**
Packed Size:	**475 x 380 x 320 mm**
Packed Volume:	**0.06 m³**
Weight / Packed Weight:	**4.5 kg / 6.1 kg**
Protection Class / IP Rating:	**I / IP20**
Certifications:	**CE, CB, GS**

DAYLIGHT EVENT PAR LIGHTS

(cable length 0.5 m, without barndoor)

Ident. No.	Description					Price / EURO	
L1.77871.E	ARRISUN® 5 EVENT			silver	Schaltbau	1.600,00	€
L1.77875.E	ARRISUN® 5 EVENT			black	Schaltbau	1.600,00	€

BALLASTS:

Ident. No.	Description					Price / EURO	
L2.76259EV	EB® 575 EVENT SINGLE	ALF	ca. 110 Hz	Schaltbau M1	120/230 V~, Appliance Inlet (IEC 320)	964,00	€
L2.76340.0	EB® 575 EVENT SIX	ALF, DMX	ca. 200 Hz	Schaltbau M3	120/230 V~ 3Ph+N, CEE 16 A	4.967,00	€
L2.76777.0	EB® 200/575/1200 MULTIFUNCTION	ALF, DMX	ca. 200 Hz	Schaltbau M3	120/230 V~ 3Ph+N, Harting HAN 6 HsB (M)	5.733,00	€
L2.76318.B	Extension cable EVENT 200/575/1200 W, 5 m, Schaltbau (M1, 4 pole + PE)					105,00	€
L2.76318.C	Extension cable EVENT 200/575/1200 W, 10 m, Schaltbau (M1, 4 pole + PE)					125,00	€
L2.76342.D	Multicore EVENT 575 W, 20 m, Schaltbau (M3, 12 pole + PE)					480,00	€
L2.76341.0	Split Box EVENT Six, 6 x 575 W (6 x 200 W, 3 x 1200 W), Schaltbau (M3, 12 pole + PE)					525,00	€
L2.76786.0	Transmitter pendant module 575					220,00	€

ARRISUN® 5 EVENT (CONTINUE)

COMPONENTS:

Ident. No.	Description	Price / EURO
L2.79670.0	4-leaf barndoor (197 mm / 7.8")	80,00 €
L2.79671.0	4-leaf barndoor, black/silver (197 mm / 7.8")	135,00 €
L0.77863.0	4 DROP-IN lens set (175 mm / 6.9") (spot, narrow flood, flood, super flood)	565,00 €
L2.77864.0	DROP-IN lens, spot, blue (175 mm / 6.9")	140,00 €
L2.77866.0	DROP-IN lens, narrow flood, small rectangle, black (175 mm / 6.9")	140,00 €
L2.77868.0	DROP-IN lens, flood, large rectangle, green (175 mm / 6.9")	140,00 €
L2.77870.0	DROP-IN lens, super flood, honeycomb, red (175 mm / 6.9")	145,00 €
L2.88726.0	ARRI Quick Action Super Clamp - black (635)	43,00 €
L2.88726.S	ARRI Quick Action Super Clamp - silver (635-0350)	41,00 €
L2.88212.0	Double female adapter 16 mm - 17 mm Pin (E400) (LE.4000.A)	14,00 €
L2.76100.0	ARRI Super Clamp with plate for EB / EBB	85,00 €
L2.74144.0	Ballast mount bracket with 16 mm socket	65,00 €
L2.76990.0	Safety cable (4 mm) 1 m, with "Kettbiner"	22,00 €
L2.0003874	Lamp DIS 575 W/SE G22 UV-B (Koto)	110,00 €
L2.89253L0	Lamp HMI 575 W/SE G22 Longlife UV (Osram)	165,00 €



ARRISUN® 18 EVENT

Type of Lamphead:	**PAR,1800 W**
Lamp Type:	**Metal Halide 1800 W/SE** **Metal Halide 1200 W/SE**
Lamp Base:	**G38**
Lens Diameter:	**250 mm**
Mounting:	**Spigot 28 mm**
Size (HxWxL) /	**543 x 384 x 376 mm /**
Packed Size:	**550 x 510 x 690 mm**
Packed Volume:	**0.19 m³**
Weight / Packed Weight:	**10.5 kg / 15.8 kg**
Protection Class / IP Rating:	**I / IP23**
Certifications:	**CE, CB,GS, cNTRLus**

DAYLIGHT EVENT PAR LIGHTS

(cable length 0.5 m, without barndoor)

Ident. No.	Description	Colour	Connector	Price / EURO
L1.37591.E	ARRISUN® 18 EVENT	silver	Schaltbau	3.100,00 €
L1.37595.E	ARRISUN® 18 EVENT	black	Schaltbau	3.100,00 €

BALLASTS:

Ident. No.	Description					Price / EURO
L2.76610.0	EB® 1200/1800 EVENT THREE	ALF, DMX, CCL	ca. 200 Hz	Harting HAN 16B	230 V~ 3Ph+N, CEE 16 A	6.300,00 €
L2.75600.F	Head-to-Ballast cable 575/1200/1800 W, 7 m, Schaltbau / Extension Cable EVENT 1200/1800					280,00 €
L2.75600.E	Head-to-Ballast cable 575/1200/1800 W, 15 m, Schaltbau / Extension Cable EVENT 1200/1800					355,00 €
L2.37714.D	Multicore EVENT 1200/1800 W, 20 m, Harting (HAN 16B, 16 pole + PE)					480,00 €
L2.37705.0	Split Box EVENT 1800, 3 x 1200/1800 W, Harting (HAN 16B, 16 pole + PE)					489,00 €
						€

COMPONENTS:

Ident. No.	Description	Price / EURO
L2.40950.0	4-leaf barndoor, True Blue® (344 mm / 13.5")	100,00 €
L2.80950.0	4-leaf barndoor (344 mm / 13.5")	90,00 €
L2.80951.0	4-leaf barndoor, black/silver (344 mm / 13.5")	185,00 €

ARRISUN® 18 EVENT CONTINUE)

COMPONENTS:

	Ident. No.	Description	Price / EURO
	L0.76818.0	4 DROP-IN lens set (250 mm / 9.8"), incl. case (spot, narrow flood, flood, super flood)	1.060,00 €
	L2.76821.0	DROP-IN lens, spot, blue (250 mm / 9.8")	190,00 €
	L2.76822.0	DROP-IN lens, narrow flood, small rectangle, black (250 mm / 9.8")	190,00 €
	L2.76823.0	DROP-IN lens, flood, large rectangle, green (250 mm / 9.8")	190,00 €
	L2.76824.0	DROP-IN lens, super flood, honeycomb, red (250 mm / 9.8")	190,00 €
	L2.76827.0	Lens case for 5 lenses, empty (36 x 21 x 41 cm)	300,00 €
	L2.76989.0	ARRI Swivelling C Clamp (C150)	119,00 €
	L2.76990.0	Safety cable (4 mm) 1 m, with "Kettbiner"	22,00 €
NEW	L2.0000655	Conversion Kit ARRISUN® 18 Event: set 4 longer brackets and spillring for improved optical quality	160,00 €
	L2.0003885	Lamp DIS 1200 W/SE G38 UV-B (Koto)	165,00 €
	L2.89254.P	Lamp MSR 1200 W/SE G38 HR (Philips)	220,00 €
	L2.89254L0	Lamp HMI 1200 W/SE G38 Longlife UV (Osram)	207,00 €
	L2.0003884	Lamp DIS 1800 W/SE G38 (Koto)	270,00 €

TRUE BLUE® D5



Type of Lamphead:	**Fresnel, 575 W**
Lamp Type:	**Metal Halide 575 W/SE**
Lamp Base:	**G22**
Lens Diameter:	**150 mm**
Mounting:	**Spigot 28 mm**
Size (HxWxL) /	**359 x 327 x 223 mm /**
Packed Size:	**390 x 390 x 360 mm**
Packed Volume:	**0.05 m³**
Weight / Packed Weight:	**6.1 kg / 7.2 kg**
Protection Class / IP Rating:	**I / IP23**
Certifications:	**CE, CB, GS, cNTRLus**

TRUE BLUE® DAYLIGHT FRESNEL LIGHTS

(cable length 0.5 m, without barndoor)

Ident. No.	Description				Price / EURO	
L1.33770.B	True Blue® D5	MAN	blue/silver	International (VEAM)	1.755,00	€
L1.33770.F	True Blue® D5	MAN	blue/silver	Schaltbau (GTV-Standard)	1.755,00	€
L1.33775.B	True Blue® D5	MAN	black	International (VEAM)	1.755,00	€
L1.33775.F	True Blue® D5	MAN	black	Schaltbau (GTV-Standard)	1.755,00	€

BALLASTS:

Ident. No.	Description					Price / EURO	
L2.76184KH	EB® 575/800	ALF, CCL, DMX	50/60/75/1000 Hz	International (VEAM)	120/230 V~ Schuko-Plug	2.995,00	€
L2.76425KH	EB® 575/1200	ALF	50/75/1000 Hz	International (VEAM)	120/230 V~ Schuko-Plug	3.515,00	€
L2.76125.0	EB® 575/1200		50/60/75 Hz	International (VEAM)	120/230 V~ Schuko-Plug	2.635,00	€
L2.76126.0	EB® 575/1200	DMX	50/60/75 Hz	International (VEAM)	120/230 V~ Schuko-Plug	3.025,00	€
L2.76425.0	EB® 575/1200	ALF	50/60/75 Hz	International (VEAM)	120/230 V~ Schuko-Plug	2.925,00	€
L2.76426.0	EB® 575/1200	ALF, DMX	50/60/75 Hz	International (VEAM)	120/230 V~ Schuko-Plug	3.315,00	€
L2.76427.0	EB® 575/1200	ALF	50/60/75 Hz	Schaltbau	120/230 V~ Schuko-Plug	2.925,00	€

BALLASTS:

Ident. No.	Description	Price / EURO
L2.75600.0	Head-to-Ballast cable 575/800/1200/1800 W, 7 m, International connector (VEAM)	280,00 €
L2.75600.F	Head-to-Ballast cable 575/1200/1800 W, 7 m, Schaltbau / Extension Cable EVENT 1200/1800 W	280,00 €
L2.75600.C	Head-to-Ballast cable 575/800/1200/1800 W, 15 m, International connector (VEAM)	355,00 €
L2.75600.E	Head-to-Ballast cable 575/1200/1800 W, 15 m, Schaltbau / Extension Cable EVENT 1200/1800 W	355,00 €

COMPONENTS:

Ident. No.	Description	Price / EURO
L2.39670.0	4-leaf barndoor, True Blue® (197 mm / 7.8")	80,00 €
L2.39700.0	8-leaf barndoor, True Blue® (197 mm / 7.8")	120,00 €
L2.79690.0	Filter Frame (197 mm / 7.8")	21,00 €
L2.79660.0	Set of 4 scrims (197 mm / 7.8")	90,00 €
L2.79660.A	Scrim, full single (197 mm / 7.8")	23,00 €
L2.79660.B	Scrim, full double (197 mm / 7.8")	25,00 €
L2.79660.C	Scrim, half single (197 mm / 7.8")	23,00 €
L2.79660.D	Scrim, half double (197 mm / 7.8")	25,00 €
L2.76246.0	Speed ring circular (9190) (197 mm / 7.8")	180,00 €
L2.70844.0	Chimera Lightbank Video Pro Plus "S", incl. 3 front screens (8125)	360,00 €
L2.89060.0	Speed ring circular (9192) (197 mm / 7.8")	180,00 €
L2.89053.0	Chimera Lightbank Daylite Junior Plus "S", incl. 3 front screens (8225)	475,00 €
L2.79680.0	Snoot (197 mm / 7.8") with variable aperture	85,00 €
L2.88717.0	Universal ARRI Cine Stand LS.4 (007BA)	156,00 €
L2.88679.0	Wheel set with brakes, Ø 75 mm / 22 mm mount (110)	79,00 €
L2.76989.0	ARRI Swivelling C Clamp (C150)	119,00 €
L2.76985.0	ARRI Super Clamp (035)	28,00 €
L2.76100.0	ARRI Super Clamp with plate for EB® / EBB	85,00 €
L2.76986.0	Stud 16 mm with thread 3/8" (036-38), plugs into Superclamp (035)	6,00 €
L2.76990.0	Safety Caböe (4 mm) 1 m, with "Kettbiner"	22,00 €
L2.0003874	Lamp DIS 575 W/SE G22 UV-B (Koto)	110,00 €
L2.89253L0	Lamp HMI 575 W/SE G22 Longlife UV (Osram)	165,00 €



TRUE BLUE® D12

Type of Lamphead:	**Fresnel, 1200 W**
Lamp Type:	**Metal Halide 1200 W/SE**
Lamp Base:	**G38**
Lens Diameter:	**175 mm**
Mounting:	**Spigot 28 mm**
Size (HxWxL) /	**511 x 375 x 325 mm /**
Packed Size:	**460 x 400 x 650 mm**
Packed Volume:	**0.12 m³**
Weight / Packed Weight:	**9.9 kg / 12.3 kg**
Protection Class / IP Rating:	**I / IP23**
Certifications:	**CE, CB, GS, cNTRLus**

TRUE BLUE® DAYLIGHT FRESNEL LIGHTS

(cable length 0.6 m, without barndoor)

Ident. No.	Description				Price / EURO	
L1.33730.B	True Blue® D12	MAN	blue/silver	International (VEAM)	2.435,00	€
L1.33730.F	True Blue® D12	MAN	blue/silver	Schaltbau (GTV-Standard)	2.435,00	€
L1.33735.B	True Blue® D12	MAN	black	International (VEAM)	2.435,00	€
L1.33735.F	True Blue® D12	MAN	black	Schaltbau (GTV-Standard)	2.435,00	€

BALLASTS:

Ident. No.	Description					Price / EURO	
L2.76425KH	EB® 575/1200	ALF	50/75/1000 Hz	International (VEAM)	120/230 V~ Schuko-Plug	3.515,00	€
L2.76125.0	EB® 575/1200		50/60/75 Hz	International (VEAM)	120/230 V~ Schuko-Plug	2.635,00	€
L2.76126.0	EB® 575/1200	DMX	50/60/75 Hz	International (VEAM)	120/230 V~ Schuko-Plug	3.025,00	€
L2.76425.0	EB® 575/1200	ALF	50/60/75 Hz	International (VEAM)	120/230 V~ Schuko-Plug	2.925,00	€
L2.76426.0	EB® 575/1200	ALF, DMX	50/60/75 Hz	International (VEAM)	120/230 V~ Schuko-Plug	3.315,00	€
L2.76427.0	EB® 575/1200	ALF	50/60/75 Hz	Schaltbau	120/230 V~ Schuko-Plug	2.925,00	€
L2.75600.0	Head-to-Ballast cable 575/800/1200/1800 W, 7 m, International connector (VEAM)					280,00	€
L2.75600.F	Head-to-Ballast cable 575/1200/1800 W, 7 m, Schaltbau / Extension Cable EVENT 1200/1800 W					280,00	€
L2.75600.C	Head-to-Ballast cable 575/800/1200/1800 W, 15 m, International connector (VEAM)					355,00	€
L2.75600.E	Head-to-Ballast cable 575/1200/1800 W, 15 m, Schaltbau / Extension Cable EVENT 1200/1800 W					355,00	€

TRUE BLUE® D12 (CONTINUE)

COMPONENTS:

Ident. No.	Description	Price / EURO
L2.39870.0	4-leaf barndoor, True Blue® (245 mm / 9.7")	90,00 €
L2.39900.0	8-leaf barndoor, True Blue® (245 mm / 9.7")	150,00 €
L2.79890.0	Filter Frame (230 mm / 9.1")	26,00 €
L2.79860.0	Set of 4 scrims (230 mm / 9.1")	90,00 €
L2.79860.A	Scrim, full single (230 mm / 9.1")	23,00 €
L2.79860.B	Scrim, full double (230 mm / 9.1")	24,00 €
L2.79860.C	Scrim, half single (230 mm / 9.1")	23,00 €
L2.79860.D	Scrim, half double (230 mm / 9.1")	24,00 €
L2.76248.0	Speed ring circular (9205) (245 mm / 9.7")	390,00 €
L2.79880.0	Snoot (245 mm / 9.7") with variable aperture	105,00 €
L2.88717.0	Universal ARRI Cine Stand LS.4 (007BA)	156,00 €
L2.88679.0	Wheel set with brakes, Ø 75 mm / 22 mm mount (110)	79,00 €
L2.76989.0	ARRI Swivelling C Clamp (C150)	119,00 €
L2.76990.0	Safety cable (4 mm) 1 m, with "Kettbiner"	22,00 €
L2.0003885	Lamp DIS 1200 W/SE G38 UV-B (Koto)	165,00 €
L2.89254.P	Lamp MSR 1200 W/SE G38 HR (Philips)	220,00 €
L2.89254L0	Lamp HMI 1200 W/SE G38 Longlife UV (Osram)	207,00 €



TRUE BLUE® D25

Type of Lamphead:	**Fresnel, 2500 W**
Lamp Type:	**Metal Halide 2500 W/SE**
Lamp Base:	**G38**
Lens Diameter:	**250 mm**
Mounting:	**Spigot 28 mm**
Size (HxWxL) /	**643 x 464 x 390 mm /**
Packed Size:	**550 x 510 x 690 mm**
Packed Volume:	**0.19 m³**
Weight / Packed Weight:	**14.0 kg / 18.0 kg**
Protection Class / IP Rating:	**I / IP23**
Certifications:	**CE, CB, GS, cNTRLus**

TRUE BLUE® DAYLIGHT FRESNEL LIGHTS

(cable length 0.6 m, without barndoor)

Ident. No.	Description				Price / EURO	
L1.33670.B	True Blue® D25	MAN	blue/silver	International (VEAM)	3.420,00	€
L1.33670.F	True Blue® D25	MAN	blue/silver	Schaltbau (GTV-Standard)	3.420,00	€
L1.33675.B	True Blue® D25	MAN	black	International (VEAM)	3.420,00	€
L1.33675.F	True Blue® D25	MAN	black	Schaltbau (GTV-Standard)	3.420,00	€

BALLASTS:

Ident. No.	Description					Price / EURO	
L2.76640KH	EB® 2.5/4	ALF	50/75/1000 Hz	International (VEAM)	230 V~ bare ends	7.020,00	€
L2.76675KH	EB® 2.5/4	ALF	60/75/1000 Hz	International (VEAM)	120/230 V~ bare ends	7.580,00	€
L2.76640.0	EB® 2.5/4	ALF	50/60/75 Hz	International (VEAM)	230 V~ bare ends	5.855,00	€
L2.76641.0	EB® 2.5/4	ALF, DMX	50/60/75 Hz	International (VEAM)	230 V~ bare ends	6.240,00	€
L2.76650.0	EB® 2.5/4	ALF, CCL	50/60/75 Hz	International (VEAM)	230 V~ bare ends	5.855,00	€
L2.76646.0	EB® 2.5/4	DMX	50/60/75 Hz	International (VEAM)	120/230 V~ bare ends	5.950,00	€
L2.75620.0	Head-to-Ballast cable 2500/4000 W, 7 m, International connector (VEAM)					290,00	€
L2.75620.F	Head-to-Ballast cable 2500/4000 W, 7 m, Schaltbau					300,00	€
L2.75620.C	Head-to-Ballast cable 2500/4000 W, 15 m, International connector (VEAM)					390,00	€
L2.75620.E	Head-to-Ballast cable 2500/4000 W, 15 m, Schaltbau					390,00	€

TRUE BLUE® D25 (CONTINUE)

COMPONENTS:

Ident. No.	Description	Price / EURO
L2.40950.0	4-leaf barndoor, True Blue® (344 mm / 13.5")	100,00 €
L2.40960.0	8-leaf barndoor, True Blue® (344 mm / 13.5")	210,00 €
L2.80970.0	Filter Frame (330 mm / 13.0")	38,00 €
L2.80980.0	Set of 4 scrims (330 mm / 13.0")	135,00 €
L2.80980.A	Scrim, full single (330 mm / 13.0")	35,00 €
L2.80980.B	Scrim, full double (330 mm / 13.0")	40,00 €
L2.80980.C	Scrim, half single (330 mm / 13.0")	35,00 €
L2.80980.D	Scrim, half double (330 mm / 13.0")	40,00 €
L2.76247.0	Speed ring circular (9305) (343 mm / 13.5")	360,00 €
L2.89054.0	Chimera Lightbank Quartz Plus "S", incl. 3 front screens (8425)	700,00 €
L2.80975.0	Snoot (344 mm / 13.5") with variable aperture	120,00 €
L2.76979.0	Universal ARRI Steel Stand LS.5 (126A)	198,00 €
L2.88679.0	Wheel set with brakes, Ø 75 mm / 22 mm mount (110)	79,00 €
L2.76100.0	ARRI Super Clamp with plate for EB® / EBB	85,00 €
L2.80864.0	Safety Cable (5 mm) 1 m, with "Kettbiner"	20,00 €
L2.0003883	Lamp DIS 2500 W/SE G38 UV-B (Koto)	250,00 €
L2.89255.0	Lamp HMI 2500 W/SE XS G38 (Osram)	355,00 €



TRUE BLUE® D40

Type of Lamphead:	**Fresnel, 4000 W**
Lamp Type:	**Metal Halide 4000 W/SE**
Lamp Base:	**G38**
Lens Diameter:	**300 mm**
Mounting:	**Spigot 28 mm**
Size (HxWxL) / Packed Size:	**727 x 534 x 403 mm / 600 x 600 x 770 mm**
Packed Volume:	**0.28 m³**
Weight / Packed Weight:	**17.5 kg / 22.0 kg**
Protection Class / IP Rating:	**I / IP23**
Certifications:	**CE, CB, GS, cNTRLus**

TRUE BLUE® DAYLIGHT FRESNEL LIGHTS

(cable length 0.6 m, without barndoor)

Ident. No.	Description				Price / EURO
L1.34000.B	True Blue® D40	MAN	blue/silver	International (VEAM)	4.555,00 €
L1.34000.F	True Blue® D40	MAN	blue/silver	Schaltbau (GTV-Standard)	4.555,00 €
L1.34005.B	True Blue® D40	MAN	black	International (VEAM)	4.555,00 €
L1.34005.F	True Blue® D40	MAN	black	Schaltbau (GTV-Standard)	4.555,00 €

BALLASTS:

Ident. No.	Description					Price / EURO
L2.76640KH	EB® 2.5/4	ALF	50/75/1000 Hz	International (VEAM)	230 V~ bare ends	7.020,00 €
L2.76675KH	EB® 2.5/4	ALF	60/75/1000 Hz	International (VEAM)	120/230 V~ bare ends	7.580,00 €
L2.76640.0	EB® 2.5/4	ALF	50/60/75 Hz	International (VEAM)	230 V~ bare ends	5.855,00 €
L2.76641.0	EB® 2.5/4	ALF, DMX	50/60/75 Hz	International (VEAM)	230 V~ bare ends	6.240,00 €
L2.76650.0	EB® 2.5/4	ALF, CCL	50/60/75 Hz	International (VEAM)	230 V~ bare ends	5.855,00 €
L2.76646.0	EB® 2.5/4	DMX	50/60/75 Hz	International (VEAM)	120/230 V~ bare ends	5.950,00 €
L2.75620.0	Head-to-Ballast cable 2500/4000 W, 7 m, International connector (VEAM)					290,00 €
L2.75620.F	Head-to-Ballast cable 2500/4000 W, 7 m, Schaltbau					300,00 €
L2.75620.C	Head-to-Ballast cable 2500/4000 W, 15 m, International connector (VEAM)					390,00 €
L2.75620.E	Head-to-Ballast cable 2500/4000 W, 15 m, Schaltbau					390,00 €

TRUE BLUE® D40 (CONTINUE)

COMPONENTS:

Ident. No.	Description	Price / EURO
L2.41200.0	4-leaf barndoor, True Blue® (413 mm / 16.3")	120,00 €
L2.81210.0	8-leaf barndoor (413 mm / 16.3")	230,00 €
L2.81220.0	Filter Frame (400 mm / 15.8")	40,00 €
L2.81230.0	Set of 4 scrims (400 mm / 15.8")	155,00 €
L2.81230.A	Scrim, full single (400 mm / 15.8")	40,00 €
L2.81230.B	Scrim, full double (400 mm / 15.8")	45,00 €
L2.81230.C	Scrim, half single (400 mm / 15.8")	40,00 €
L2.81230.D	Scrim, half double (400 mm / 15.8")	45,00 €
L2.89062.0	Speed ring circular (9365) (411 mm / 16.2")	420,00 €
L2.89054.0	Chimera Lightbank Quartz Plus "S", incl. 3 front screens (8425)	700,00 €
L2.89058.0	Chimera Lightbank Daylite Plus "M", incl. 3 front screens (8635)	1.120,00 €
L2.89059.0	Chimera Lightbank Daylite Plus "L", incl. 3 front screens (8645)	1.700,00 €
L2.81225.0	Snoot (413 mm / 16.3") with variable aperture	245,00 €
L2.79946.0	IR protective glass (400 mm) between lamphead and shutter	540,00 €
L2.8800561	ARRI Wind-up Stand LS.6 (083NWA)	565,00 €
L2.34071.0	Conversion Kit from True Blue® ST5 and D40 to Theater version: Theater stirrup	198,00 €
L2.76959.0	Wheel set with brakes, Ø 75 mm / M10 mount with brakes (104)	70,00 €
L2.88706.0	Wheel set with brakes, Ø 125 mm / M10 mount with brakes (251)	114,00 €
L2.88096.0	Wheel set with brakes, Ø 160 mm / M10 mount with brakes (374)	268,00 €
L2.76989.0	ARRI Swivelling C Clamp (C150)	119,00 €
L2.80864.0	Safety cable (5 mm) 1 m, with "Kettbiner"	20,00 €
L2.0003882	Lamp DIS 4000 W/SE G38 UV-B (Koto)	380,00 €
L2.89256.0	Lamp HMI 4000 W/SE XS G38 (Osram)	495,00 €

COMPACT 200



Type of Lamphead:	**Fresnel, 200 W**
Lamp Type:	**Metal Halide 200 W/SE**
Lamp Base:	**GZY 9,5**
Lens Diameter:	**112 mm**
Mounting:	**Socket 16 mm**
Size (HxWxL) /	**294 x 218 x 193 mm /**
Packed Size:	**360 x 260 x 290 mm**
Packed Volume:	**0.27 m³**
Weight / Packed Weight:	**2.3 kg / 3.1 kg**
Protection Class / IP Rating:	**I / IP23**
Certifications:	**CE**

DAYLIGHT FRESNEL LIGHTS

(cable length 1 m, without barndoor)

Ident. No.	Description					Price / EURO
L1.73330.B	COMPACT 200	MAN	blue/silver	Amphenol		1.325,00 €

BALLASTS:

Ident. No.	Description					Price / EURO
L2.76115.0	EB® 200	ALF, IP23, w/o fan	200 Hz	Amphenol	120/230 V~ Schuko-Plug	1.255,00 €
L2.76013.B	EB® 125/200	ALF	200 Hz	Binder Amphenol	120/230 V~ Appliance inlet with Schuko-Plug	1.075,00 €
L2.76040.B	EBB 125/200		150 Hz	Binder Amphenol	20-36 V⎓ XLR 4-Plug	1.075,00 €
L2.76270.B	EBB 200/400		110 Hz	Amphenol International (VEAM)	20-36 V⎓ 2 x XLR 4-Plug	1.805,00 €
L2.73372.0	Head-to-Ballast cable 200 W, 7 m, Amphenol					200,00 €

COMPONENTS:

Ident. No.	Description	Price / EURO
L2.79470.0	4-leaf barndoor (168 mm / 6.6")	59,00 €
L2.79471.0	4-leaf barndoor, black/silver (168 mm / 6.6")	115,00 €
L2.79500.0	8-leaf barndoor (168 mm / 6.6")	110,00 €
L2.79490.0	Filter Frame (168 mm / 6.6")	20,00 €

COMPACT 200 (CONTINUE)

COMPONENTS:

Ident. No.	Description	Price / EURO
L2.79460.0	Set of 4 scrims (168 mm / 6.6")	75,00 €
L2.79460.A	Scrim, full single (168 mm / 6.6")	19,00 €
L2.79460.B	Scrim, full double (168 mm / 6.6")	22,00 €
L2.79460.C	Scrim, half single (168 mm / 6.6")	19,00 €
L2.79460.D	Scrim, half double (168 mm / 6.6")	22,00 €
L2.89068.0	Speed ring circular (9670) (168 mm / 6.6")	115,00 €
L2.89074.0	Speed ring circular metal (9670AL) (168 mm / 6.6")	150,00 €
L2.89069.0	Speed ring circular (9672) (168 mm / 6.6")	150,00 €
L2.76106.0	Chimera Lightbank Video Pro Plus "XXS", incl. 3 front screens (8105)	220,00 €
L2.76719.0	Chimera Lightbank Video Pro Plus "XS", incl. 3 front screens (8115)	290,00 €
L2.70844.0	Chimera Lightbank Video Pro Plus "S", incl. 3 front screens (8125)	360,00 €
L2.79480.0	Snoot (168 mm / 6.6")	65,00 €
L2.73365.0	Case for 1 x COMPACT 200, ballast & accessories (43 x 29 x 34 cm)	375,00 €
L2.76976.0	Medium ARRI Kit Stand LS.2 (050A)	76,00 €
L2.88679.0	Wheel set with brakes, Ø 75 mm / 22 mm mount (110)	79,00 €
L2.76100.0	ARRI Super Clamp with plate for EB® / EBB	85,00 €
L2.73490.0	Universal Clamp with spigot 16 mm (camera mount)	125,00 €
L2.74144.0	Ballast mount bracket with 16 mm socket	65,00 €
L2.76986.0	Stud 16 mm with thread 3/8" (036-38), plugs into Superclamp (035)	6,00 €
L2.76809.0	Safety cable (3 mm) 0.6 m, with "Kettbiner"	17,00 €
L2.0003876	Lamp DIS 200 W/SE GZY 9,5 UV-B (Koto)	130,00 €
L2.89251.0	Lamp HMI 200 W/SE GZY 9,5 UV (Osram)	160,00 €



COMPACT 6000 PLUS

Type of Lamphead:	**Fresnel, 6000 W**
Lamp Type:	**Metal Halide 6000 W/SE**
Lamp Base:	**GX38**
Lens Diameter:	**420 mm**
Mounting:	**Spigot 28 mm**
Size (HxWxL) / Packed Size:	**790 x 694 x 590 mm / 780 x 730 x 700 mm**
Packed Volume:	**0.40 m³**
Weight / Packed Weight:	**30.5 kg / 38.5 kg**
Protection Class / IP Rating:	**I / IP23**
Certifications:	**CE, CB, GS, cNTRLus**

DAYLIGHT FRESNEL LIGHTS

(cable length 0.8 m, without barndoor)

Ident. No.	Description				Price / EURO
L1.75720.B	COMPACT 6000 Plus	MAN	blue/silver	International (VEAM)	8.160,00 €

BALLASTS:

Ident. No.	Description					Price / EURO
L2.76181KH	EB® 6/9	ALF, CCL, DMX	50/75/1000 Hz	International (VEAM)	230 V~ bare ends	11.650,00 €
L2.76181.0	EB® 6/9	ALF, CCL, DMX	50/60/75 Hz	International (VEAM)	230 V~ bare ends	10.500,00 €
L2.76172.0	EB® 6/12	ALF	50/60/75 Hz	International (VEAM)	120 V~ (only 6kW) / 230 V~ bare ends	10.630,00 €
L2.76182.0	EB® 6/12	ALF, DMX	50/60/75 Hz	International (VEAM)	120 V~ (only 6kW) / 230 V~ bare ends	11.020,00 €
L2.77940.0	Head-to-Ballast cable 6000/9000 W, 7 m, International connector (VEAM)					615,00 €
L2.77940.A	Head-to-Ballast cable 6000/9000 W, 15 m, International connector (VEAM)					885,00 €

COMPONENTS:

Ident. No.	Description	Price / EURO
L2.82150.0	4-leaf barndoor (510 mm / 20.1")	410,00 €
L2.82155.0	Filter Frame (495 mm / 19.5")	105,00 €
L2.82160.0	Set of 4 scrims (495 mm / 19.5")	205,00 €

COMPACT 6000 PLUS (CONTINUE)

COMPONENTS:

Ident. No.	Description	Price / EURO
L2.82160.A	Scrim, full single (495 mm / 19.5")	55,00 €
L2.82160.B	Scrim, full double (495 mm / 19.5")	55,00 €
L2.82160.C	Scrim, half single (495 mm / 19.5")	55,00 €
L2.82160.D	Scrim, half double (495 mm / 19.5")	55,00 €
L2.89063.0	Speed ring circular (9435) (508 mm / 20.0")	420,00 €
L2.89055.0	Chimera Lightbank Quartz Plus "M", incl. 3 front screens (8435)	895,00 €
L2.89058.0	Chimera Lightbank Daylite Plus "M", incl. 3 front screens (8635)	1.120,00 €
L2.8800561	ARRI Wind-up Stand LS.6 (083NWA)	565,00 €
L2.76959.0	Wheel set with brakes, Ø 75 mm / M10 mount with brakes (104)	70,00 €
L2.88706.0	Wheel set with brakes, Ø 125 mm / M10 mount with brakes (251)	114,00 €
L2.88096.0	Wheel set with brakes, Ø 160 mm / M10 mount with brakes (374)	268,00 €
L2.76989.0	ARRI Swivelling C Clamp (C150)	119,00 €
L2.80866.0	Safety Cable (6 mm) 1 m, with "Kettbiner"	21,00 €
L2.0003881	Lamp DIS 6000 W/SE G38 UV-B (Koto)	1.300,00 €
L2.89257.0	Lamp HMI 6000 W/SE G38 (Osram)	1.725,00 €



COMPACT 12000 BABY

Type of Lamphead:	**Fresnel, 12000 W**
Lamp Type:	**Metal Halide 12000 W/SE**
Lamp Base:	**GX38**
Lens Diameter:	**500 mm**
Mounting:	**Spigot 28 mm**
Size (HxWxL) /	**997 x 884 x 710 mm**
Packed Size:	**1120 x 1170 x 1050 mm**
Packed Volume:	**1.38 m³**
Weight / Packed Weight:	**47.2 kg / 79.5 kg (with pallet)**
Protection Class / IP Rating:	**I / IP23**
Certifications:	**CE, CB, GS, cNTRLus**

DAYLIGHT FRESNEL LIGHTS

(cable length 1 m, without barndoor)

Ident. No.	Description					Price / EURO
L1.75790.B	COMPACT 12000 Baby	MAN	blue/silver	International (VEAM)		12.030,00 €

BALLASTS:

Ident. No.	Description					Price / EURO
L2.76172HS	EB® 6/12	ALF	60/75/300 Hz	International (VEAM)	120 V~ (only 6 kW) / 230 V~ bare ends	11.705,00 €
L2.76172.0	EB® 6/12	ALF	50/60/75 Hz	International (VEAM)	120 V~ (only 6 kW) / 230 V~ bare ends	10.630,00 €
L2.76182.0	EB® 6/12	ALF, DMX	50/60/75 Hz	International (VEAM)	120 V~ (only 6 kW) / 230 V~ bare ends	11.020,00 €
L2.76290.0	EB® 12/18	ALF, with trolley	50/60/75 Hz	International (VEAM)	230 V~ bare ends	13.655,00 €
L2.76295.0	EB® 12/18	ALF, DMX, with trolley & indication of lamp power	50/60/75 Hz	International (VEAM)	230 V~ bare ends	14.630,00 €
L2.82294.0	Head-to-Ballast/Dimmer cable 12/18/24 kW, 15 m, International connector (VEAM)					970,00 €
L2.82294.A	Head-to-Ballast/Dimmer cable 12/18/24 kW, 20 m, International connector (VEAM)					1.240,00 €

COMPACT 12000 BABY (CONTINUE)

COMPONENTS:

Ident. No.	Description	Price / EURO
L2.74750.0	4-leaf barndoor (530 mm / 20.9")	340,00 €
L2.70634.0	Set of 4 scrims (530 mm / 20.9")	270,00 €
L2.70634.A	Scrim, full single (530 mm / 20.9")	70,00 €
L2.70634.B	Scrim, full double (530 mm / 20.9")	75,00 €
L2.70634.C	Scrim, half single (530 mm / 20.9")	70,00 €
L2.70634.D	Scrim, half double (530 mm / 20.9")	75,00 €
L2.89077.0	Speed ring circular (9445) (530 mm / 20.9")	420,00 €
L2.89056.0	Chimera Lightbank Quartz Plus "L", incl. 3 front screens (8445)	1.430,00 €
L2.89059.0	Chimera Lightbank Daylite Plus "L", incl. 3 front screens (8645)	1.700,00 €
L2.76989.0	ARRI Swivelling C Clamp (C150)	119,00 €
L2.89259.G	Lamp CSR 12000 W/SE G38 HR (GE)	3.200,00 €
L2.89261.0	Lamp HMI 12000 W/SE XS GX38 (Osram)	3.650,00 €

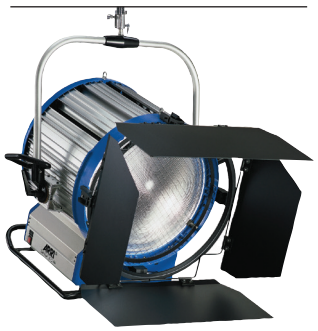

ARRI DAYLIGHT 18/12

Type of Lamphead:	**Fresnel, 18000 W**
Lamp Type:	**Metal Halide 18000 W/DE** **Metal Halide 12000 W/DE**
Lamp Base:	**S 30**
Lens Diameter:	**625 mm**
Mounting:	**Spigot 28 mm**
Size (HxWxL) /	**1058 x 1040 x 825 mm**
Packed Size:	**1135 x 1170 x 1050 mm**
Packed Volume:	**1.39 m³**
Weight / Packed Weight:	**69.5 kg / 114.0 kg (with pallet)**
Protection Class / IP Rating:	**I / IP23**
Certifications:	**CE, CB, GS, cNTRLus**

DAYLIGHT FRESNEL LIGHTS

(cable length 1 m, without barndoor)

Ident. No.	Description					Price / EURO
L1.71160.B	ARRI DAYLIGHT 18/12	MAN	blue/silver	International (VEAM)		14.990,00 €

BALLASTS:

Ident. No.	Description					Price / EURO
L2.76290.0	EB® 12/18	ALF, with trolley	50/60/75 Hz	International (VEAM)	230 V~ bare ends	13.655,00 €
L2.76295.0	EB® 12/18	ALF, DMX, with trolley	50/60/75 Hz	International (VEAM)	230 V~ bare ends	14.630,00 €
L2.82294.0	Head-to-Ballast/Dimmer cable 12/18/24 kW, 15 m, International connector (VEAM)					970,00 €
L2.82294.A	Head-to-Ballast/Dimmer cable 12/18/24 kW, 20 m, International connector (VEAM)					1.240,00 €

COMPONENTS:

Ident. No.	Description	Price / EURO
L2.71100.0	4-leaf barndoor (740 mm / 29.1")	635,00 €
L2.71115.0	Set of 4 scrims (740 mm / 29.1")	325,00 €
L2.71115.A	Scrim, full single (740 mm / 29.1")	80,00 €
L2.71115.B	Scrim, full double (740 mm / 29.1")	85,00 €
L2.71115.C	Scrim, half single (740 mm / 29.1")	80,00 €
L2.71115.D	Scrim, half double (740 mm / 29.1")	85,00 €
L2.71195.0	UV-protection glass Retrofit for ARRI Daylight 18/12; for the change from fresnel lens to UV-protection glass to get hard shadows	1.100,00 €
L2.89258.0	Lamp HMI 12000 W/GS DE S30 (Osram)	1.510,00 €
L2.89260.0	Lamp HMI 18000 W/DE S30 XS (Osram)	1.675,00 €



COMPACT 2500 THEATER

Type of Lamphead:	**Fresnel, 2500 W**
Lamp Type:	**Metal Halide 2500 W/SE**
Lamp Base:	**G38**
Lens Diameter:	**250 mm**
Mounting:	**Spigot 28 mm**
Size (HxWxL) /	**770 x 590 x 396 mm /**
Packed Size:	**670 x 610 x 620 mm**
Packed Volume:	**0.25 m³**
Weight / Packed Weight:	**23.0 kg / 27.0 kg**
Protection Class / IP Rating:	**I / IP23**
Certifications:	**CE, CB, GS, cNTRLus**

DAYLIGHT FRESNEL LIGHTS FOR THEATER

(cable 0.5 m, incl. Theater cassette, without barndoor)

Ident. No.	Description				Price / EURO
L1.73680.B	COMPACT 2500 Theater	MAN	grey	International (VEAM)	4.280,00 €
L1.73680.F	COMPACT 2500 Theater	MAN	grey	Schaltbau (GTV-Standard)	4.280,00 €
L1.73690.B	COMPACT 2500 Theater	MOT*	grey	International (VEAM)	4.280,00 €
L1.73690.F	COMPACT 2500 Theater	MOT*	grey	Schaltbau (GTV-Standard)	4.280,00 €

*lamphead without stirrup; suitable for mounting of a motorized yoke by Licht-Technik

BALLASTS:

Ident. No.	Description					Price / EURO
L2.76640.0	EB® 2.5/4	ALF	50/60/75 Hz	International (VEAM)	230 V~ bare ends	5.855,00 €
L2.76641.0	EB® 2.5/4	ALF, DMX	50/60/75 Hz	International (VEAM)	230 V~ bare ends	6.240,00 €
L2.76650.0	EB® 2.5/4	ALF, CCL	50/60/75 Hz	International (VEAM)	230 V~ bare ends	5.855,00 €
L2.76646.0	EB® 2.5/4	DMX	50/60/75 Hz	International (VEAM)	120/230 V~ bare ends	5.950,00 €
L2.75620.0	Head-to-Ballast cable 2500/4000 W, 7 m, International connector (VEAM)					290,00 €
L2.75620.F	Head-to-Ballast cable 2500/4000 W, 7 m, Schaltbau					300,00 €
L2.75620.C	Head-to-Ballast cable 2500/4000 W, 15 m, International connector (VEAM)					390,00 €
L2.75620.E	Head-to-Ballast cable 2500/4000 W, 15 m, Schaltbau					390,00 €

COMPACT 2500 THEATER (CONTINUE)

COMPONENTS:

Ident. No.	Description	Price / EURO
L2.40950.0	4-leaf barndoor, True Blue® (344 mm / 13.5")	100,00 €
L2.40960.0	8-leaf barndoor, True Blue® (344 mm / 13.5")	210,00 €
L2.80970.0	Filter Frame (330 mm / 13.0")	38,00 €
L2.80975.0	Snoot (344 mm / 13.5") with variable aperture	120,00 €
L2.80866.0	Safety cable (6 mm) 1 m, with "Kettbiner"	21,00 €
L2.0003883	Lamp DIS 2500 W/SE G38 UV-B (Koto)	250,00 €
L2.89255.0	Lamp HMI 2500 W/SE XS G38 (Osram)	355,00 €



COMPACT 4000 THEATER

Type of Lamphead:	**Fresnel, 4000 W**
Lamp Type:	**Metal Halide 4000 W/SE**
Lamp Base:	**G38**
Lens Diameter:	**300 mm**
Mounting:	**Spigot 28 mm**
Size (HxWxL) /	**856 x 656 x 456 mm /**
Packed Size:	**695 x 725 x 775 mm**
Packed Volume:	**0.39 m³**
Weight / Packed Weight:	**27.0 kg / 36.5 kg**
Protection Class / IP Rating:	**I / IP23**
Certifications:	**CE, CB, GS, cNTRLus**

DAYLIGHT FRESNEL LIGHTS FOR THEATER

(cable 0.5 m, incl. Theater cassette, without barndoor)

Ident. No.	Description				Price / EURO
L1.74010.B	COMPACT 4000 Theater	MAN	grey	International (VEAM)	5.500,00 €
L1.74010.F	COMPACT 4000 Theater	MAN	grey	Schaltbau (GTV-Standard)	5.500,00 €
L1.74020.B	COMPACT 4000 Theater	MOT*	grey	International (VEAM)	5.500,00 €
L1.74020.F	COMPACT 4000 Theater	MOT*	grey	Schaltbau (GTV-Standard)	5.500,00 €

*lamphead without stirrup; suitable for mounting of a motorized yoke by Licht-Technik

BALLASTS:

Ident. No.	Description					Price / EURO
L2.76640.0	EB® 2.5/4	ALF	50/60/75 Hz	International (VEAM)	230 V~ bare ends	5.855,00 €
L2.76641.0	EB® 2.5/4	ALF, DMX	50/60/75 Hz	International (VEAM)	230 V~ bare ends	6.240,00 €
L2.76650.0	EB® 2.5/4	ALF, CCL	50/60/75 Hz	International (VEAM)	230 V~ bare ends	5.855,00 €
L2.76646.0	EB® 2.5/4	DMX	50/60/75 Hz	International (VEAM)	120/230 V~ bare ends	5.950,00 €
L2.75620.0	Head-to-Ballast cable 2500/4000 W, 7 m, International connector (VEAM)					290,00 €
L2.75620.F	Head-to-Ballast cable 2500/4000 W, 7 m, Schaltbau					300,00 €
L2.75620.C	Head-to-Ballast cable 2500/4000 W, 15 m, International connector (VEAM)					390,00 €
L2.75620.E	Head-to-Ballast cable 2500/4000 W, 15 m, Schaltbau					390,00 €

COMPACT 4000 THEATER (CONTINUE)

COMPONENTS:

Ident. No.	Description	Price / EURO
L2.41200.0	4-leaf barndoor, True Blue® (413 mm / 16.3")	120,00 €
L2.81210.0	8-leaf barndoor (413 mm / 16.3")	230,00 €
L2.81220.0	Filter Frame (400 mm / 15.8")	40,00 €
L2.81225.0	Snoot (413 mm / 16.3") with variable aperture	245,00 €
L2.79946.0	IR protective glass (400 mm) between lamphead and shutter	540,00 €
L2.80866.0	Safety cable (6 mm) 1 m, with "Kettbiner"	21,00 €
L2.0003882	Lamp DIS 4000 W/SE G38 UV-B (Koto)	380,00 €
L2.89256.0	Lamp HMI 4000 W/SE XS G38 (Osram)	495,00 €

ARRILUX POCKETPAR® 125



Type of Lamphead:	**PAR, 125 W**
Lamp Type:	**HMI 125 W/SE**
Lamp Base:	**GZX 9,5**
Lens Diameter:	**77 mm**
Mounting:	**Socket 16 mm**
Size (HxWxL) / Packed Size:	**143 x 126 x 190 mm /175 x 200 x 380 mm**
Packed Volume:	**0.013 m³**
Weight / Packed Weight:	**1.1 kg / 1.6 kg**
Protection Class / IP Rating:	**I / IP20**
Certifications:	**CE, CB, GS, cNTRLus**

PORTABLE DAYLIGHT PAR LIGHTS

(cable length 1.5 m)

Ident. No.	Description				Price / EURO
L1.73375.0	ARRILUX POCKETPAR® 125	blue/silver	Binder	1.390,00	€

BALLASTS:

Ident. No.	Description					Price / EURO
L2.76013.B	EB® 125/200	ALF	200 Hz	Binder Amphenol	120/230 V~ Appliance inlet with Schuko-Plug	1.075,00 €
L2.76040.B	EBB 125/200		150 Hz	Binder Amphenol	20-36 V⎓ XLR 4-Plug	1.075,00 €
L2.73382.0	Head-to-Ballast cable 125 W, 7 m, Binder					195,00 €

COMPONENTS:

Ident. No.	Description	Price / EURO
L2.73380.0	4-leaf barndoor, ARRILUX 125 (78 mm / 3.1")	60,00 €
L2.76107.0	Speed ring, outer ring (2415) (157 mm / 6.2"), in connection with L2.76102.0 or L2.70824.0	40,00 €
L2.76102.0	Speed ring, adapter bracket for ARRILUX 125, in connection with L2.76107.0	45,00 €
L2.89070.0	Speed ring circular (9790) (78 mm / 3.1")	165,00 €
L2.76106.0	Chimera Lightbank Video Pro Plus "XXS", incl. 3 front screens (8105)	220,00 €

ARRILUX POCKETPAR® 125 (CONTINUE)

COMPONENTS:

Ident. No.	Description	Price / EURO
L2.73488.0	Conversion Filter 3/4 CTO, 5600 to 3200 K (78 mm / 3.1")	90,00 €
L2.74264.0	Conversion Filter 1/2 CTO, 5600 to 3800 K (78 mm / 3.1")	90,00 €
L2.74266.0	Conversion Filter 1/4 CTO, 5600 to 4500 K (78 mm / 3.1")	90,00 €
L2.74268.0	Conversion Filter 1/8 CTO, 5600 to 4900 K (78 mm / 3.1")	90,00 €
L0.73492.0	ARRILUX 125 lens set (78 mm / 3.1") (narrow flood, flood, super flood, super flood frosted	500,00 €
L2.73402.0	ARRILUX 125 narrow flood lens, black (78 mm / 3.1")	125,00 €
L2.73404.0	ARRILUX 125 flood lens, green (78 mm / 3.1")	125,00 €
L2.73462.0	ARRILUX 125 super flood lens, red (78 mm / 3.1")	125,00 €
L2.73464.0	ARRILUX 125 super flood lens frosted, silver (78 mm / 3.1")	125,00 €
L2.73403.0	ARRILUX 125 empty ring for lenses and CTO's (78 mm / 3.1")	40,00 €
L2.73388.A	Case for ARRILUX 125 Sets (55 x 38 x 30 cm)	310,00 €
L2.88000.0	Deluxe Pocket Par Kit Case	445,00 €
L2.76976.0	Medium ARRI Kit Stand LS.2 (050A)	76,00 €
L2.76975.0	Small ARRI Kit Stand LS.1 (050KA)	79,00 €
L2.76965.0	Compact ARRI Kit Stand LS.01 (050MKA)	82,00 €
L2.88679.0	Wheel set with brakes, Ø 75 mm / 22 mm mount (110)	79,00 €
L2.76985.0	ARRI Super Clamp (035)	28,00 €
L2.76100.0	ARRI Super Clamp with plate for EB® / EBB	85,00 €
L2.74144.0	Ballast mount bracket with 16 mm socket	65,00 €
L2.76986.0	Stud 16 mm with thread 3/8" (036-38), plugs into Superclamp (035)	6,00 €
L2.73408.0	Handgrip for ARRILUX, 16 mm spigot size with threat 3/8", light weight	55,00 €
L2.76257.0	ARRI-Tubolite for ARRILUX 125, incl. case	865,00 €
L2.88648.0	Lite-Tite Umbrella Adapter (Manfrotto-Code 026) for Tubolite	32,00 €
L2.76038.0	Mounting Bracket for ARRILUX POCKETPAR® 125 (spare part for ARRI Adapter Bracket L2.76102.0)	25,00 €
L2.73406.0	Adapter for handgrip (micro-yoke)	49,00 €
L2.73407.0	Head/Ballast Adapter, metal, for ARRILUX 125	49,00 €
L2.0003886	Lamp DIS 125 W/SE GZX 9,5 (Koto)	130,00 €
L2.89250.P	Lamp MSR 125 W/SE GZX 9,5 HR (Philips)	365,00 €

ARRILUX POCKETPAR® 200



Type of Lamphead:	**PAR, 200 W**
Lamp Type:	**Metal Halide 200 W/SE**
Lamp Base:	**GZY 9,5**
Lens Diameter:	**105 mm**
Mounting:	**Socket 16 mm**
Size (HxWxL) /	**211 x 225 x 258 mm /**
Packed Size:	**255 x 390 x 440 mm**
Packed Volume:	**0.044 m³**
Weight / Packed Weight:	**1.9 kg / 3.6 kg**
Protection Class / IP Rating:	**I / IP23**
Certifications:	**CE, CB, GS, cNTRLus**

PORTABLE DAYLIGHT PAR LIGHTS

(cable length 2 m, without barndoor)

Ident. No.	Description					Price / EURO
L1.70790.0	ARRILUX POCKETPAR® 200		blue/silver	Amphenol		1.590,00 €

BALLASTS:

Ident. No.	Description					Price / EURO
L2.76115.0	EB® 200	ALF, IP23, w/o fan	200 Hz	Amphenol	120/230 V~ Schuko-Plug	1.255,00 €
L2.76013.B	EB® 125/200	ALF	200 Hz	Binder Amphenol	120/230 V~ Appliance inlet with Schuko-Plug	1.075,00 €
L2.76040.B	EBB 125/200		150 Hz	Binder Amphenol	20-36 V⎓ XLR 4-Plug	1.075,00 €
L2.76270.B	EBB 200/400		110 Hz	Amphenol International (VEAM)	20-36 V⎓ 2 x XLR 4-Plug	1.805,00 €
L2.73372.0	Head-to-Ballast cable 200 W, 7 m, Amphenol					200,00 €

COMPONENTS:

Ident. No.	Description	Price / EURO
L2.79170.0	4-leaf barndoor (130 mm / 5.1")	45,00 €
L2.79160.0	Set of 4 scrims (130 mm / 5.1")	65,00 €
L2.79160.A	Scrim, full single (130 mm / 5.1")	17,00 €
L2.79160.B	Scrim, full double (130 mm / 5.1")	19,00 €
L2.79160.C	Scrim, half single (130 mm / 5.1")	17,00 €
L2.79160.D	Scrim, half double (130 mm / 5.1")	19,00 €

ARRILUX POCKETPAR® 200 (CONTINUE)

COMPONENTS:

Ident. No.	Description	Price / EURO
L2.76107.0	Speed ring, outer ring (2415) (157 mm / 6.2"), in connection with L2.76102.0 or L2.70824.0	40,00 €
L2.70824.0	Speed ring, adapter for ARRILUX 200 with Lighthouse, in connection with L2.76107.0	110,00 €
L2.70838.0	Speed ring, complete with adapter, for ARRILUX 200 with Lighthouse, contains adapter & outer ring (L2.70824.0 & L2.76107.0)	110,00 €
L2.89067.0	Speed ring circular (9640) (130 mm / 5.1")	98,00 €
L2.76719.0	Chimera Lightbank Video Pro Plus "XS", incl. 3 front screens (8115)	290,00 €
L2.70844.0	Chimera Lightbank Video Pro Plus "S", incl. 3 front screens (8125)	360,00 €
L2.70819.0	Conversion Filter 3/4 CTO, 5600 to 3200 K (112 mm / 4.4")	135,00 €
L0.70830.0	ARRILUX 200 lens set (112 mm / 4.4") (narrow flood, flood, super flood, super flood frosted	560,00 €
L2.70832.0	ARRILUX 200 narrow flood lens, black (112 mm / 4.4")	140,00 €
L2.70833.0	ARRILUX 200 flood lens, green (112 mm / 4.4")	140,00 €
L2.70834.0	ARRILUX 200 super flood lens, red (112 mm / 4.4")	140,00 €
L2.70835.0	ARRILUX 200 super flood lens frosted, silver (112 mm / 4.4")	140,00 €
L2.77818.0	Lens bag for max. 5 lenses up to Ø 235 mm, empty	30,00 €
L2.70839.0	Case for ARRILUX 200 Sets (58 x 28 x 39 cm)	375,00 €
L2.88019.0	Basic Kit Case for POCKETLITE 200/400 (L9.LITECASE)	475,00 €
L2.76976.0	Medium ARRI Kit Stand LS.2 (050A)	76,00 €
L2.76975.0	Small ARRI Kit Stand LS.1 (050KA)	79,00 €
L2.88679.0	Wheel set with brakes, Ø 75 mm / 22 mm mount (110)	79,00 €
L2.76985.0	ARRI Super Clamp (035)	28,00 €
L2.76100.0	ARRI Super Clamp with plate for EB® / EBB	85,00 €
L2.74144.0	Ballast mount bracket with 16 mm socket	65,00 €
L2.76986.0	Stud 16 mm with thread 3/8" (036-38), plugs into Superclamp (035)	6,00 €
L2.73408.0	Handgrip for ARRILUX, 16 mm spigot size with threat 3/8", light weight	55,00 €
L2.88648.0	Lite-Tite Umbrella Adapter (Manfrotto-Code 026) for Tubolite	32,00 €
L2.70790.0	Reflector housing PAR, ARRILUX 200	890,00 €
L2.70825.0	Lighthouse 200, clear glass	190,00 €
L2.70825.S	Lighthouse 200, frosted glass	265,00 €
L2.70865.0	Stirrup for ARRILUX 200/400 lighthouse	120,00 €
L2.70826.0	Shutter for ARRILUX 200 lighthouse	255,00 €
L2.73406.0	Adapter for handgrip (micro-yoke), ARRILUX	49,00 €
L2.0003876	Lamp DIS 200 W/SE GZY 9,5 UV-B (Koto)	130,00 €
L2.89251.0	Lamp HMI 200 W/SE GZY 9,5 UV (Osram)	160,00 €

ARRILUX POCKETPAR® 400



Type of Lamphead:	**PAR, 400 W**
Lamp Type:	**Metal Halide 400 W/SE**
Lamp Base:	**GZZ 9,5**
Lens Diameter:	**125 mm**
Mounting:	**Socket 16 mm**
Size (HxWxL) / Packed Size:	**244 x 237 x 282 mm / 350 x 485 x 380 mm**
Packed Volume:	**0.065 m³**
Weight / Packed Weight:	**2.6 kg / 4.4 kg**
Protection Class / IP Rating:	**I / IP23**
Certifications:	**CE, CB, GS, cNTRLus**

PORTABLE DAYLIGHT PAR LIGHTS

(cable length 2 m, without barndoor)

Ident. No.	Description			Price / EURO
L1.70880.0	ARRILUX POCKETPAR® 400	blue/silver	International (VEAM)	1.890,00 €

BALLASTS:

Ident. No.	Description					Price / EURO
L2.76260.0	EB® 400/575	ALF	110 Hz	International (VEAM)	120/230 V~ Appliance inlet with Schuko-Plug	1.850,00 €
L2.76270.B	EBB 200/400		110 Hz	Amphenol International (VEAM)	20-36 V⎓ 2 x XLR 4-Plug*	1.805,00 €
L2.70857.0	Head-to-Ballast cable 400 W, 7 m, International connector (VEAM)					290,00 €

* Both battery cables have to be connected when operated with 400 W lamphead.

COMPONENTS:

Ident. No.	Description	Price / EURO
L2.79470.0	4-leaf barndoor (168 mm / 6.6")	59,00 €
L2.79471.0	4-leaf barndoor, black/silver (168 mm / 6.6")	115,00 €
L2.79500.0	8-leaf barndoor (168 mm / 6.6")	110,00 €
L2.79460.0	Set of 4 scrims (168 mm / 6.6")	75,00 €
L2.79460.A	Scrim, full single (168 mm / 6.6")	19,00 €
L2.79460.B	Scrim, full double (168 mm / 6.6")	22,00 €
L2.79460.C	Scrim, half single (168 mm / 6.6")	19,00 €
L2.79460.D	Scrim, half double (168 mm / 6.6")	22,00 €

ARRILUX POCKETPAR® 400 (CONTINUE)

COMPONENTS:

Ident. No.	Description	Price / EURO
L2.89068.0	Speed ring circular (9670) (168 mm / 6.6")	115,00 €
L2.89074.0	Speed ring circular metal (9670AL) (168 mm / 6.6")	150,00 €
L2.89069.0	Speed ring circular (9672) (168 mm / 6.6")	150,00 €
L2.70837.0	Speed ring, outer ring (2421) (191 mm / 7.5"), in connection with L2.70898.0	45,00 €
L2.70898.0	Speed ring, adapter for ARRILUX 400 with Lighthouse, in connection with L2.70837.0	95,00 €
L2.70888.0	Speed ring, complete with adapter, for ARRILUX 400 with Lighthouse, contains adapter & outer ring (L2.70898.0 & L2.70837.0)	95,00 €
L2.70844.0	Chimera Lightbank Video Pro Plus "S", incl. 3 front screens (8125)	360,00 €
L2.70940.0	Chimera Lightbank Video Pro Plus "M", incl. 3 front screens (8135)	565,00 €
L2.70846.0	Conversion Filter 3/4 CTO, 5600 to 3200 K (130 mm / 5.1")	140,00 €
L0.77824.0	5 DROP-IN lens set (130 mm / 5.1") (spot, narrow flood, flood, super flood, super flood frosted)	700,00 €
L0.77825.0	4 DROP-IN lens set (130 mm / 5.1") (spot, narrow flood, flood, super flood)	560,00 €
L2.77826.0	DROP-IN lens, spot, blue (130 mm / 5.1")	140,00 €
L2.77828.0	DROP-IN lens, narrow flood, small rectangle, black (130 mm / 5.1")	140,00 €
L2.77830.0	DROP-IN lens, flood, large rectangle, green (130 mm / 5.1")	140,00 €
L2.77832.0	DROP-IN lens, super flood, honeycomb, red (130 mm / 5.1")	140,00 €
L2.77834.0	DROP-IN lens, super flood frosted, honeycomb, silver (130 mm / 5.1")	140,00 €
L2.77818.0	Lens bag for max. 5 lenses up to Ø 235 mm, empty	30,00 €
L2.70903.0	Case for ARRILUX 400 Kit (71 x 41 x 32 cm)	410,00 €
L2.70902.0	Profi case for ARRILUX 400 Kit (with lighthouse compartment) (80 x 42 x 32 cm)	500,00 €
L2.70867.0	Shutter for ARRILUX 400 lighthouse	350,00 €
L2.70880.0	Reflector housing PAR for ARRILUX 400	1.015,00 €
L2.70860.0	Lighthouse 400, clear glass	255,00 €
L2.70860.S	Lighthouse 400, frosted glass	330,00 €
L2.70865.0	Stirrup for ARRILUX 200/400 lighthouse	120,00 €
L2.73408.0	Handgrip for ARRILUX, 16 mm spigot size with threat 3/8", light weight	55,00 €
L2.73406.0	Adapter for handgrip (micro-yoke), ARRILUX	49,00 €
L2.70845.0	Source Four Adapter Set for ARRILUX 400	425,00 €
L2.76975.0	Small ARRI Kit Stand LS.1 (050KA)	79,00 €
L2.88679.0	Wheel set with brakes, Ø 75 mm / 22 mm mount (110)	79,00 €
L2.76985.0	ARRI Super Clamp (035)	28,00 €
L2.76100.0	ARRI Super Clamp with plate for EB® / EBB	85,00 €
L2.74144.0	Ballast mount bracket with 16 mm socket	65,00 €
L2.76986.0	Stud 16 mm with thread 3/8" (036-38), plugs into Superclamp (035)	6,00 €
L2.0003875	Lamp DIS 400 W/SE GZZ 9,5 UV-B (Koto)	140,00 €
L2.89252.P	Lamp MSR 400 W/SE GZZ 9,5 HR (Philips)	215,00 €



ARRI X 5

Type of Lamphead:	**Flood, 575 W**
Lamp Type:	**Metal Halide 575 W/SE**
Lamp Base:	**G22**
Lens Size:	**215 x 235 mm**
Mounting:	**Spigot 28 mm**
Size (HxWxL) /	**550 x 376 x 208 mm /**
Packed Size:	**510 x 440 x 410 mm**
Packed Volume:	**0.09 m³**
Weight / Packed Weight:	**8.0 kg / 9.5 kg**
Protection Class / IP Rating:	**I / IP23**
Certifications:	**CE**

DAYLIGHT BROAD LIGHTS

(cable length 1 m, without barndoor)

Ident. No.	Description					Price / EURO
L1.82200.B	ARRI X 5	MAN	blue/silver	International (VEAM)		1.850,00 €

BALLASTS:

Ident. No.	Description					Price / EURO
L2.76184KH	EB® 575/800	ALF, CCL, DMX	50/60/75/1000 Hz	International (VEAM)	120/230 V~ Schuko-Plug	2.995,00 €
L2.76425KH	EB® 575/1200	ALF	50/75/1000 Hz	International (VEAM)	120/230 V~ Schuko-Plug	3.515,00 €
L2.76125.0	EB® 575/1200		50/60/75 Hz	International (VEAM)	120/230 V~ Schuko-Plug	2.635,00 €
L2.76126.0	EB® 575/1200	DMX	50/60/75 Hz	International (VEAM)	120/230 V~ Schuko-Plug	3.025,00 €
L2.76425.0	EB® 575/1200	ALF	50/60/75 Hz	International (VEAM)	120/230 V~ Schuko-Plug	2.925,00 €
L2.76426.0	EB® 575/1200	ALF, DMX	50/60/75 Hz	International (VEAM)	120/230 V~ Schuko-Plug	3.315,00 €
L2.75600.0	Head-to-Ballast cable 575/800/1200/1800 W, 7 m, International connector (VEAM)					280,00 €
L2.75600.C	Head-to-Ballast cable 575/800/1200/1800 W, 15 m, International connector (VEAM)					355,00 €

ARRI X 5 (CONTINUE)

COMPONENTS:

Ident. No.	Description	Price / EURO
L2.82240.0	4-leaf barndoor, square (247 mm / 9.7") - for ARRI X5	75,00 €
L2.82249.0	UV protective glass, frosted for ARRI X 5	160,00 €
L2.88717.0	Universal ARRI Cine Stand LS.4 (007BA)	156,00 €
L2.88679.0	Wheel set with brakes, Ø 75 mm / 22 mm mount (110)	79,00 €
L2.76989.0	ARRI Swivelling C Clamp (C150)	119,00 €
L2.76100.0	ARRI Super Clamp with plate for EB® / EBB	85,00 €
L2.76990.0	Safety cable (4 mm) 1 m, with "Kettbiner"	22,00 €
L2.0003874	Lamp DIS 575 W/SE G22 UV-B (Koto)	110,00 €
L2.89253L0	Lamp HMI 575 W/SE G22 Longlife UV (Osram)	165,00 €

ARRI X 12



Type of Lamphead:	**Flood, 1200 W**
Lamp Type:	**Metal Halide 1200 W/SE**
Lamp Base:	**G38**
Lens Size:	**315 x 330 mm**
Mounting:	**Spigot 28 mm**
Size (HxWxL) /	**619 x 495 x 260 mm /**
Packed Size:	**620 x 610 x 670 mm**
Packed Volume:	**0.25 m³**
Weight / Packed Weight:	**14.7 kg / 19.5 kg**
Protection Class / IP Rating:	**I / IP23**
Certifications:	**CE, CB, GS, cNTRLus**

DAYLIGHT BROAD LIGHTS

(cable length 1 m, with barndoor)

Ident. No.	Description					Price / EURO
L1.82250.B	ARRI X 12	MAN	blue/silver	International (VEAM)		2.805,00 €

BALLASTS:

Ident. No.	Description					Price / EURO
L2.76184KH	EB® 575/800	ALF, CCL, DMX	50/60/75/1000 Hz	International (VEAM)	120/230 V~ Schuko-Plug	2.995,00 €
L2.76425KH	EB® 575/1200	ALF	50/75/1000 Hz	International (VEAM)	120/230 V~ Schuko-Plug	3.515,00 €
L2.76125.0	EB® 575/1200		50/60/75 Hz	International (VEAM)	120/230 V~ Schuko-Plug	2.635,00 €
L2.76126.0	EB® 575/1200	DMX	50/60/75 Hz	International (VEAM)	120/230 V~ Schuko-Plug	3.025,00 €
L2.76425.0	EB® 575/1200	ALF	50/60/75 Hz	International (VEAM)	120/230 V~ Schuko-Plug	2.925,00 €
L2.76426.0	EB® 575/1200	ALF, DMX	50/60/75 Hz	International (VEAM)	120/230 V~ Schuko-Plug	3.315,00 €
L2.75600.0	Head-to-Ballast cable 575/800/1200/1800 W, 7 m, International connector (VEAM)					280,00 €
L2.75600.C	Head-to-Ballast cable 575/800/1200/1800 W, 15 m, International connector (VEAM)					355,00 €

ARRI X 12 (CONTINUE)

COMPONENTS:

Ident. No.	Description	Price / EURO
L2.82252.0	4-leaf barndoor, square (338 mm / 13.3") - for ARRI X12 up to SN 250	190,00 €
L2.82775.0	4-leaf barndoor, square (342 mm / 13.5") - for ARRI X12 from SN 251	180,00 €
L2.89055.0	Chimera Lightbank Quartz Plus "M", incl. 3 front screens (8435)	895,00 €
L2.89056.0	Chimera Lightbank Quartz Plus "L", incl. 3 front screens (8445)	1.430,00 €
L2.82774.0	UV protective glass, frosted - for ARRI X 12 from SN 251	245,00 €
L2.88717.0	Universal ARRI Cine Stand LS.4 (007BA)	156,00 €
L2.88679.0	Wheel set with brakes, Ø 75 mm / 22 mm mount (110)	79,00 €
L2.76989.0	ARRI Swivelling C Clamp (C150)	119,00 €
L2.80864.0	Safety cable (5 mm) 1 m, with "Kettbiner"	20,00 €
L2.0003885	Lamp DIS 1200 W/SE G38 UV-B (Koto)	165,00 €
L2.89254L0	Lamp HMI 1200 W/SE G38 Longlife UV (Osram)	207,00 €
L2.89254.P	Lamp MSR 1200 W/SE G38 HR (Philips)	220,00 €



ARRI X 40/25

Type of Lamphead:	**Flood, 4000 W**
Lamp Type:	**Metal Halide 4000 W/SE** **Metal Halide 2500 W/SE**
Lamp Base:	**G38**
Lens Size:	**385 x 400 mm**
Mounting:	**Spigot 28 mm**
Size (HxWxL) /	**760 x 590 x 290 mm /**
Packed Size:	**620 x 610 x 670 mm**
Packed Volume:	**0.25 m³ ccm**
Weight / Packed Weight:	**21.1 kg / 24.8 kg**
Protection Class / IP Rating:	**I / IP23**
Certifications:	**CE, CB, GS, cNTRLus**

DAYLIGHT BROAD LIGHTS

(cable length 1.3 m, without barndoor)

Ident. No.	Description				Price / EURO	
L1.82400.B	ARRI X 40/25	MAN	blue/silver	International (VEAM)	4.105,00	€

BALLASTS:

Ident. No.	Description					Price / EURO	
L2.76640KH	EB® 2.5/4	ALF	50/75/1000 Hz	International (VEAM)	230 V~ bare ends	7.020,00	€
L2.76675KH	EB® 2.5/4	ALF	60/75/1000 Hz	International (VEAM)	120/230 V~ bare ends	7.580,00	€
L2.76640.0	EB® 2.5/4	ALF	50/60/75 Hz	International (VEAM)	230 V~ bare ends	5.855,00	€
L2.76641.0	EB® 2.5/4	ALF, DMX	50/60/75 Hz	International (VEAM)	230 V~ bare ends	6.240,00	€
L2.76650.0	EB® 2.5/4	ALF, CCL	50/60/75 Hz	International (VEAM)	230 V~ bare ends	5.855,00	€
L2.76646.0	EB® 2.5/4	DMX	50/60/75 Hz	International (VEAM)	120/230 V~ bare ends	5.950,00	€
L2.75620.0	Head-to-Ballast cable 2500/4000 W, 7 m, International connector (VEAM)					290,00	€
L2.75620.C	Head-to-Ballast cable 2500/4000 W, 15 m, International connector (VEAM)					390,00	€

ARRI X 40/25 (CONTINUE)

COMPONENTS:

Ident. No.	Description	Price / EURO
L2.82425.0	4-leaf barndoor, square (426 mm / 16.8") - for ARRI X 40/25 up to SN 425	245,00 €
L2.82717.0	4-leaf barndoor, square (422 mm / 16.6") - for ARRI X 40/25 from SN 426	235,00 €
L2.89056.0	Chimera Lightbank Quartz Plus "L", incl. 3 front screens (8445)	1.430,00 €
L2.82740.0	UV protective glass, frosted for ARRI X 40/25 - from SN 553	245,00 €
L2.8800561	ARRI Wind-up Stand LS.6 (083NWA)	565,00 €
L2.76959.0	Wheel set with brakes, Ø 75 mm / M10 mount with brakes (104)	70,00 €
L2.88706.0	Wheel set with brakes, Ø 125 mm / M10 mount with brakes (251)	114,00 €
L2.88096.0	Wheel set with brakes, Ø 160 mm / M10 mount with brakes (374)	268,00 €
L2.76989.0	ARRI Swivelling C Clamp (C150)	119,00 €
L2.80864.0	Safety cable (5 mm) 1 m, with "Kettbiner"	20,00 €
L2.0003883	Lamp DIS 2500 W/SE G38 UV-B (Koto)	250,00 €
L2.89255.0	Lamp HMI 2500 W/SE XS G38 (Osram)	355,00 €
L2.0003882	Lamp DIS 4000 W/SE G38 UV-B (Koto)	380,00 €
L2.89256.0	Lamp HMI 4000 W/SE XS G38 (Osram)	495,00 €

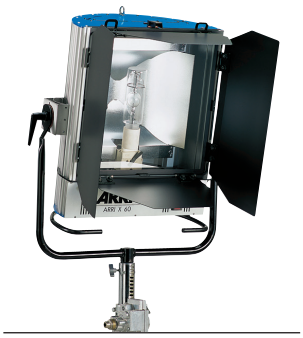

ARRI X 60

Type of Lamphead:	**Flood, 6000 W**
Lamp Type:	**Metal Halide 6000 W/SE**
Lamp Base:	**G38**
Lens Size:	**520 x 533 mm**
Mounting:	**Spigot 28 mm**
Size (HxWxL) /	**925 x 810 x 400 mm /**
Packed Size:	**770 x 720 x 700 mm**
Packed Volume:	**0.39 m³**
Weight / Packed Weight:	**32.2 kg / 49.0 kg (with pallet)**
Protection Class / IP Rating:	**I / IP23**
Certifications:	**CE, CB, GS, cNTRLus**

DAYLIGHT BROAD LIGHTS

(cable length 0.5 m, without barndoor)

Ident. No.	Description					Price / EURO
L1.82650.B	ARRI X 60	MAN	blue/silver	International (VEAM)		6.095,00 €

BALLASTS:

Ident. No.	Description					Price / EURO
L2.76181KH	EB® 6/9	ALF, CCL, DMX	50/75/1000 Hz	International (VEAM)	230 V~ bare ends	11.650,00 €
L2.76172HS	EB® 6/12	ALF	60/75/300 Hz	International (VEAM)	120 V~ (only 6kW) / 230 V~ bare ends	11.705,00 €
L2.76181.0	EB® 6/9	ALF, CCL, DMX	50/60/75 Hz	International (VEAM)	230 V~ bare ends	10.500,00 €
L2.76172.0	EB® 6/12	ALF	50/60/75 Hz	International (VEAM)	120 V~ (only 6kW) / 230 V~ bare ends	10.630,00 €
L2.76182.0	EB® 6/12	ALF, DMX	50/60/75 Hz	International (VEAM)	120 V~ (only 6kW) / 230 V~ bare ends	11.020,00 €
L2.77940.0	Head-to-Ballast cable 6000/9000 W, 7 m, International connector (VEAM)					615,00 €
L2.77940.A	Head-to-Ballast cable 6000/9000 W, 15 m, International connector (VEAM)					885,00 €

ARRI X 60 (CONTINUE)

COMPONENTS:

Ident. No.	Description	Price / EURO
L2.82675.0	4-leaf barndoor, square (518 mm / 20.4") - for ARRI X60	500,00 €
L2.82690.0	UV protective glass, frosted for ARRI X 60	295,00 €
L2.8800561	ARRI Wind-up Stand LS.6 (083NWA)	565,00 €
L2.76959.0	Wheel set with brakes, Ø 75 mm / M10 mount with brakes (104)	70,00 €
L2.88706.0	Wheel set with brakes, Ø 125 mm / M10 mount with brakes (251)	114,00 €
L2.88096.0	Wheel set with brakes, Ø 160 mm / M10 mount with brakes (374)	268,00 €
L2.76989.0	ARRI Swivelling C Clamp (C150)	119,00 €
L2.80866.0	Safety cable (6 mm) 1 m, with "Kettbiner"	21,00 €
L2.0003881	Lamp DIS 6000 W/SE G38 UV-B (Koto)	1.300,00 €
L2.89257.0	Lamp HMI 6000 W/SE G38 (Osram)	1.725,00 €



ARRI X 40/25 THEATER

Type of Lamphead:	**Flood, 4000 W**
Lamp Type:	**Metal Halide 4000 W/SE** **Metal Halide 2500 W/SE**
Lamp Base:	**G38**
Lens Size:	**385 x 400 mm**
Mounting:	**Spigot 28 mm**
Size (HxWxL) /	**726 x 564 x 312 mm /**
Packed Size:	**670 x 610 x 620 mm**
Packed Volume:	**0.25 m³**
Weight / Packed Weight:	**24.0 kg / 30.0 kg (with pallet)**
Protection Class / IP Rating:	**I / IP23**
Certifications:	**CE, CB, GS, cNTRLus**

DAYLIGHT BROAD LIGHTS FOR THEATER

(cable length 1 m. without barndoor)

Ident. No.	Description				Price / EURO
L1.82410.B	ARRI X 40/25 Theater	MAN	grey	International (VEAM)	4.345,00 €

BALLASTS:

Ident. No.	Description					Price / EURO
L2.76640.0	EB® 2.5/4	ALF	50/60/75 Hz	International (VEAM)	230 V~ bare ends	5.855,00 €
L2.76641.0	EB® 2.5/4	ALF, DMX	50/60/75 Hz	International (VEAM)	230 V~ bare ends	6.240,00 €
L2.76650.0	EB® 2.5/4	ALF, CCL	50/60/75 Hz	International (VEAM)	230 V~ bare ends	5.855,00 €
L2.76646.0	EB® 2.5/4	DMX	50/60/75 Hz	International (VEAM)	120/230 V~ bare ends	5.950,00 €
L2.75620.0	Head-to-Ballast cable 2500/4000 W, 7 m, International connector (VEAM)					290,00 €
L2.75620.C	Head-to-Ballast cable 2500/4000 W, 15 m, International connector (VEAM)					390,00 €

ARRI X THEATER 40/25 (CONTINUE)

COMPONENTS:

Ident. No.	Description	Price / EURO
L2.82425.0	4-leaf barndoor, square (426 mm / 16.8") - for ARRI X 40/25 up to SN 425	245,00 €
L2.82717.0	4-leaf barndoor, square (422 mm / 16.6") - for ARRI X 40/25 from SN 426	235,00 €
L2.82740.0	UV protective glass, frosted for ARRI X 40/25 - from SN 553	245,00 €
L2.80866.0	Safety cable (6 mm) 1 m, with "Kettbiner"	21,00 €
L2.0003883	Lamp DIS 2500 W/SE G38 UV-B (Koto)	250,00 €
L2.89255.0	Lamp HMI 2500 W/SE XS G38 (Osram)	355,00 €
L2.0003882	Lamp DIS 4000 W/SE G38 UV-B (Koto)	380,00 €
L2.89256.0	Lamp HMI 4000 W/SE XS G38 (Osram)	495,00 €

BALLASTS

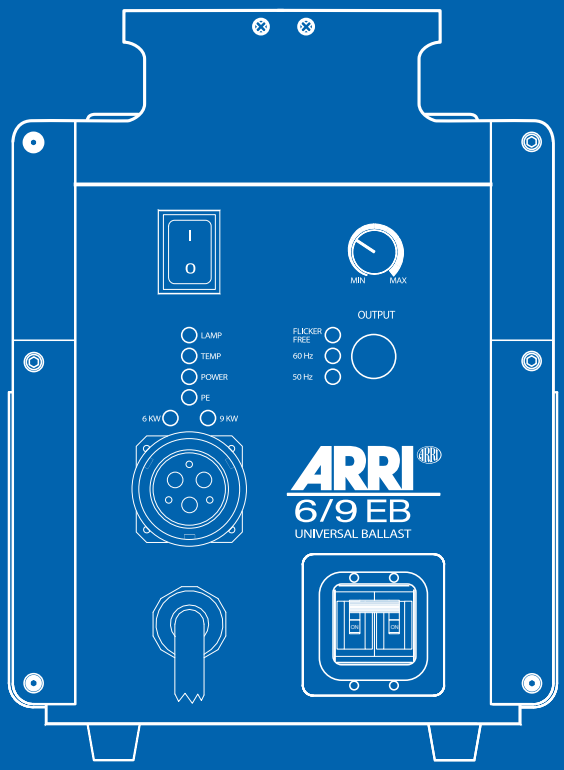
I
O
MIN
MAX
OUTPUT
LAMP
TEMP
POWER
PE
6 KW
9 KW
FLICKER FREE
60 Hz
50 Hz
ARRI
6/9 EB
UNIVERSAL BALLAST

LOCATION BALLASTS







Features	
ALF	Active Line Filter
CCL	Compensation of Cable Losses

Lamp Frequency Modes	
50 / 60 Hz	Low Noise
75 Hz	Standard
300 / 1000 Hz	High Speed

ELECTRONIC HIGH SPEED BALLASTS

Blue standard housing with handle
Mains frequency 50/60 Hz; given mains voltages are nominal values

	Ident. No.	Description	Features	Lamp Frequency	Lamphead Connector	Mains Supply	Price / EURO	
	L2.76184KH	EB® 575/800	ALF, CCL, DMX	50/60/75/1000 Hz	International (VEAM)	120/230 V~ Schuko-Plug	2.995,00	€
	L2.76425KH	EB® 575/1200	ALF	50/75/1000 Hz	International (VEAM)	120/230 V~ Schuko-Plug	3.515,00	€
	L2.76625KH	EB® 1200/1800	ALF, CCL	50/75/1000 Hz	International (VEAM)	120/230 V~ Schuko-Plug	4.840,00	€
NEU	L2.76651KH	EB® 2.5/4	ALF, CCL, DMX	50/75/1000 Hz	International (VEAM)	230 V~, bare ends	7.600,00	€
	L2.76640KH	EB® 2,5/4	ALF	50/75/1000 Hz	International (VEAM)	230 V~ bare ends	7.020,00	€
	L2.76675KH	EB® 2,5/4	ALF	60/75/1000 Hz	International (VEAM)	120/230 V~ bare ends	7.580,00	€
	L2.76181KH	EB® 6/9	ALF, CCL, DMX	50/75/1000 Hz	International (VEAM)	230 V~ bare ends	11.650,00	€
	L2.76172HS	EB® 6/12	ALF	60/75/300 Hz	International (VEAM)	120 V~ (only 6kW) / 230 V~ bare ends	11.705,00	€

ELECTRONIC LOCATION BALLASTS

Blue standard housing with handle

Mains frequency 50/60 Hz; given mains voltages are nominal values

	Ident. No.	Description	Features	Lamp Frequency	Lamphead Connector	Mains Supply	Price / EURO
	L2.76115.0	EB® 200	ALF, IP23, without Fan	ca. 200 Hz	Amphenol	120/230 V~ Schuko-Plug	1.255,00 €
	L2.76125.0	EB® 575/1200		50/60/75 Hz	International (VEAM)	120/230 V~ Schuko-Plug	2.635,00 €
	L2.76126.0	EB® 575/1200	DMX	50/60/75 Hz	International (VEAM)	120/230 V~ Schuko-Plug	3.025,00 €
	L2.76425.0	EB® 575/1200	ALF	50/60/75 Hz	International (VEAM)	120/230 V~ Schuko-Plug	2.925,00 €
	L2.76426.0	EB® 575/1200	ALF, DMX	50/60/75 Hz	International (VEAM)	120/230 V~ Schuko-Plug	3.315,00 €
	L2.76427.0	EB® 575/1200	ALF	50/60/75 Hz	Schaltbau	120/230 V~ Schuko-Plug	2.925,00 €
	L2.76625.0	EB® 1200/1800	ALF, CCL	50/60/75 Hz	International (VEAM)	120/230 V~ Schuko-Plug	4.050,00 €
	L2.76695.0	EB® 2500 Baby	ALF	50/60/75 Hz	International (VEAM)	230 V~ Schuko-Plug	4.880,00 €
	L2.76635.0	EB® 2500	ALF	50/60/75 Hz	International (VEAM)	120/230 V~ bare ends	5.520,00 €
	L2.76640.0	EB® 2.5/4	ALF	50/60/75 Hz	International (VEAM)	230 V~ bare ends	5.855,00 €
NEU	L2.76651.0	EB® 2.5/4	ALF, CCL, DMX	50/60/75 Hz	International (VEAM)	230 V~, bare ends	7.120,00 €
	L2.76641.0	EB® 2.5/4	ALF, DMX	50/60/75 Hz	International (VEAM)	230 V~ bare ends	6.240,00 €
	L2.76650.0	EB® 2.5/4	ALF, CCL	50/60/75 Hz	International (VEAM)	230 V~ bare ends	5.855,00 €
	L2.76646.0	EB® 2.5/4	DMX	50/60/75 Hz	International (VEAM)	120/230 V~ bare ends	5.950,00 €
	L2.76170.0	EB® 6000		50/60/75 Hz	International (VEAM)	230 V~ bare ends	7.735,00 €
	L2.76193.0	EB® 6000 Baby	ALF	50/60/75 Hz	International (VEAM)	230 V~ bare ends	8.780,00 €
	L2.76181.0	EB® 6/9	ALF, CCL, DMX	50/60/75 Hz	International (VEAM)	230 V~ bare ends	10.500,00 €
	L2.76172.0	EB® 6/12	ALF	50/60/75 Hz	International (VEAM)	120 V~ (only 6kW) / 230 V~ bare ends	10.630,00 €
	L2.76182.0	EB® 6/12	ALF, DMX	50/60/75 Hz	International (VEAM)	120 V~ (only 6kW) / 230 V~ bare ends	11.020,00 €
	L2.76290.0	EB® 12/18	ALF, trolley	50/60/75 Hz	International (VEAM)	230 V~ bare ends	13.655,00 €
	L2.76295.0	EB® 12/18	ALF, DMX, trolley	50/60/75 Hz	International (VEAM)	230 V~ bare ends	14.630,00 €

ELECTRONIC LIGHTWEIGHT BALLASTS

Silver aluminium profile housing

Mains frequency 50/60 Hz; given mains voltages are nominal values

Ident. No.	Description	Features	Lamp Frequency	Lamphead Connector	Mains Supply	Price / EURO
L2.76013.B	EB® 125/200	ALF	200 Hz	Binder (125 W) Amphenol (200 W)	120/230 V~ Appliance inlet with Schuko-Plug	1.075,00 €
L2.76260.0	EB® 400/575	ALF	110 Hz	International (VEAM)	120/230 V~ Appliance inlet with Schuko-Plug	1.850,00 €
L2.76262.0	EB® 400/575	ALF	110 Hz	Schaltbau	120/230 V~ Appliance inlet with Schuko-Plug	1.850,00 €

ELECTRONIC BATTERY BALLASTS

Silver aluminium profile housing

Ident. No.	Description	Features	Lamp Frequency	Lamphead Connector	Mains Supply	Price / EURO
L2.76040.B	EBB 125/200		150 Hz	Binder (125 W) Amphenol (200 W)	20-36 V⎓ XLR 4-Plug	1.075,00 €
L2.76270.B	EBB 200/400		110 Hz	Amphenol (200 W) International (VEAM) (400 W)	20-36 V⎓ 2 x XLR 4-Plug*	1.805,00 €

* Both battery cables have to be connected when operated with 400 W lampheads.

ELECTRONIC BOOSTER BALLASTS

Silver aluminium 19“ housing, 4 units, for rack mount installation

Given mains voltage is nominal value

Ident. No.	Description	Features	Lamp Frequency	Lamphead Connector	Mains Supply	Price / EURO
L2.76693.0	EB® 4000 Booster	ALF, hour counter, remote control connector	75 Hz	Harting (HAN 6 HSB (F))	230 V~ Harting connector	8.990,00 €

CHOKE BALLASTS

Stainless steel housing with handle

Switchable mains frequency: 230 - 240 V~/50 Hz, 220 V~/60 Hz

Ident. No.	Description	Features	Lamp Frequency	Lamphead Connector	Mains Supply	Price / EURO
L2.75012.E	CB 1200		50/60 Hz	International (VEAM)	230 V~ Schuko-Plug	1.365,00 €
L2.75024.E	CB 2500	DMX	50/60 Hz	International (VEAM)	230 V~ Schuko-Plug	2.145,00 €
L2.75870.E	CB 4000	DMX	50/60 Hz	International (VEAM)	230 V~ bare ends	3.900,00 €

EVENT BALLASTS



ELECTRONIC EVENT BALLASTS

Silver aluminium 19“ housing, 4 units, for rack mount installation
* EB® 575 EVENT SINGLE with portable aluminium profile housing
Mains frequency 50/60 Hz; given mains voltages are nominal values

Ident. No.	Description	Features	Lamp Frequency	Lamphead Connector	Mains Supply	Price / EURO
L2.76259EV	EB® 575 EVENT SINGLE*	ALF	ca. 110 Hz	Schaltbau M1	120/230 V~ Appliance Inlet with Schuko-Plug	964,00 €
L2.76340.0	EB® 575 EVENT SIX	ALF, DMX	ca. 200 Hz	Schaltbau M3	120/230 V~ 3Ph+N, CEE 16 A	4.967,00 €
L2.76610.0	EB® 1200/1800 EVENT THREE	ALF, DMX, CCL	ca. 200 Hz	Harting HAN 16B	230 V~, 3Ph+N, CEE 16 A	6.300,00 €
L2.76777.0	EB® 200/575/1200 MULTIFUNCTION	ALF, DMX	ca. 200 Hz	Schaltbau M3	120/230 V~ 3Ph+N, Harting HAN 6 HsB (M)	5.733,00 €

TUNGSTEN

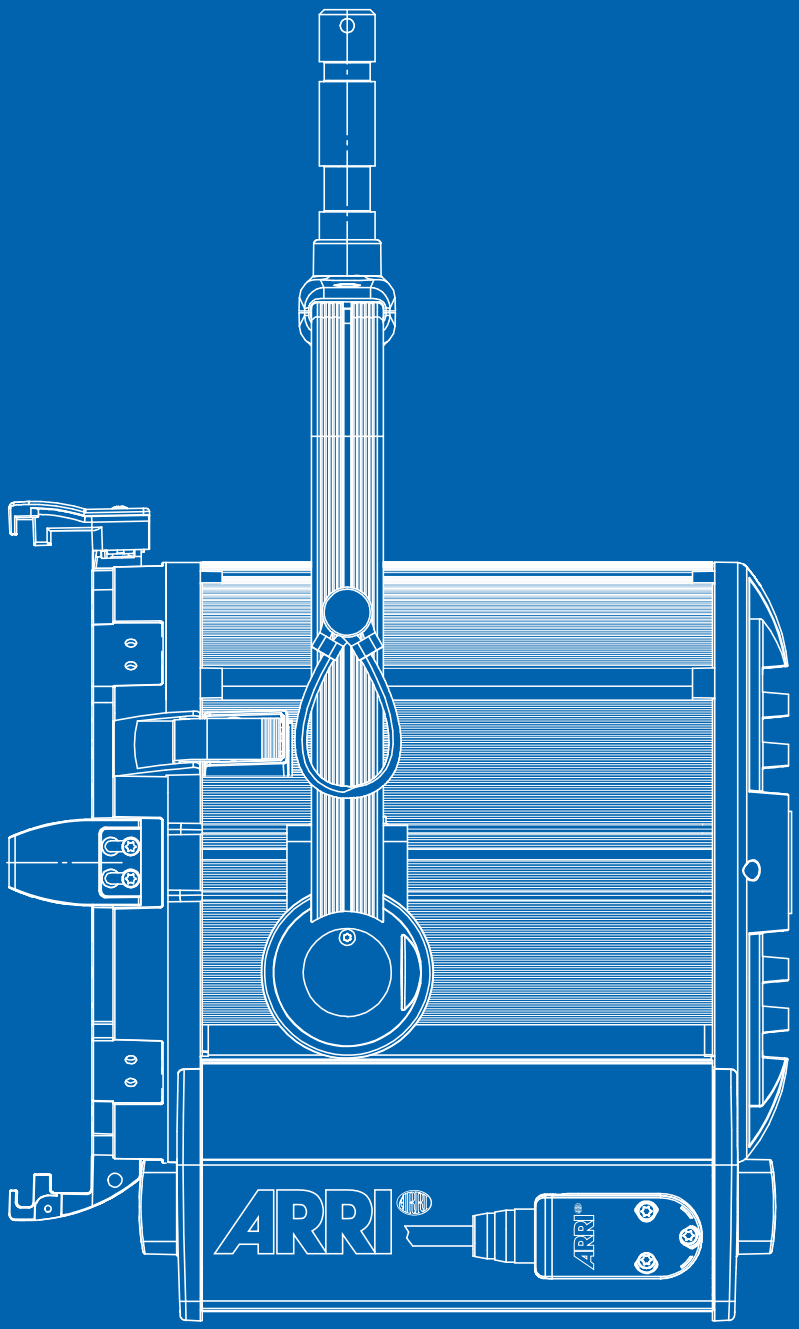

ARRILITE 750 Plus



Type of Lamphead:	**Open Face with facetted reflector, 750 W**
Lamp Type:	**HPL* 750 W, 575 W, 375 W** **GKV** 600 W, FKR 650 W, HX 800 W**
Lamp Base:	**G 9,5**
Mounting:	**Socket 16 mm**
Size (HxWxL) /	**226 x 230 x 224 mm /**
Packed Size:	**260 x 230 x 290 mm**
Packed Volume:	**0.017 m³**
Weight / Packed Weight:	**1.6 kg / 3.1 kg**
Protection Class / IP Rating:	**I / IP20**
Certifications:	**CE, CB, GS, cNTRLus**

TUNGSTEN PORTABLE LIGHTS WITH MAX TECHNOLOGY®

(cable length 3 m, with line switch; incl. 4-leaf barndoor and accessory holder)

Ident. No.	Description					Price / EURO
L3.36700.B	ARRILITE 750 Plus	MAN	blue	100 - 240 V~	bare ends	370,00 €
L3.36700.D	ARRILITE 750 Plus	MAN	blue	100 - 240 V~	Schuko-Plug	370,00 €

COMPONENTS:

Ident. No.	Description	Price / EURO
L2.79470.0	4-leaf barndoor (168 mm / 6.6")	59,00 €
L2.79460.0	Set of 4 scrims (168 mm / 6.6")	75,00 €
L2.79460.A	Scrim, full single (168 mm / 6.6")	19,00 €
L2.79460.B	Scrim, full double (168 mm / 6.6")	22,00 €
L2.79460.C	Scrim, half single (168 mm / 6.6")	19,00 €
L2.79460.D	Scrim, half double (168 mm / 6.6")	22,00 €
L2.36780.0	Accessory Holder for ARRILITE 750 Plus	52,00 €
L2.70844.0	Chimera Lightbank Video Pro Plus "S", incl. 3 front screens (8125)	360,00 €
L2.77180.0	ARRI filter pack (Frost F2, Heavy Frost 129, Daylight Blue Frost 224, Daylight 3/4 Blue 201; each 2 x)	35,00 €
L2.76966.0	Dichroic daylight filter (166 mm)	120,00 €
L2.36806.R	Case for 3 lampheads (81 x 36 x 34 cm), with wheels	365,00 €
L2.36806.0	Case for 3 lampheads (81 x 36 x 34 cm)	320,00 €
L2.36807.R	Case for 4 lampheads (100 x 40 x 34 cm), with wheels	420,00 €

ARRILITE 750 PLUS (CONTINUE)

COMPONENTS:

Ident. No.	Description	Price / EURO
L2.88020.0	Soft bag for stands, gel rolls or frames	70,00 €
L2.76976.0	Medium ARRI Kit Stand LS.2 (050A)	76,00 €
L2.76965.0	Compact ARRI Kit Stand LS.01 (050MKA)	82,00 €
L2.8803653	Master Stand (1004BAC)	121,00 €
L2.88679.0	Wheel set with brakes, Ø 75 mm / 22 mm mount (110)	79,00 €
L2.76985.0	ARRI Super Clamp (035)	28,00 €
L2.76986.0	Stud 16 mm with thread 3/8" (036-38), plugs into Superclamp (035)	6,00 €
L2.73408.0	Handgrip, 16 mm spigot size with thread 3/8", light weight	55,00 €
L2.36770.0	Lamp cooling adapter for ARRILITE 750 Plus	32,00 €
L2.36800.0	Lamp HPL* 750 W / 230 V G9,5 (Osram)	28,00 €
L2.36805.0	Lamp HX** 800 W / 230 V G9,5 (Osram)	30,00 €

* HPL lamp invented by and licensed from David Cunningham

** in combination with lamp cooling adapter L2.36770.0



ARRILITE 2000 Plus

Type of Lamphead:	**Open Face with facet reflector, 2000 W**
Lamp Type:	**FEX 2000 W**
Lamp Base:	**RX7s**
Mounting:	**Socket 16 mm**
Size (HxWxL) / Packed Size:	**317 x 355 x 241 mm / 375 x 345 x 320 mm**
Packed Volume:	**0.04 m³**
Weight / Packed Weight:	**3.0 kg / 5.5 kg**
Protection Class / IP Rating:	**I / IP20**
Certifications:	**CE, CB, GS, cNTRLus**

TUNGSTEN PORTABLE LIGHTS WITH MAX TECHNOLOGY®

(cable length 3 m, with line switch; incl. 4-leaf barndoor)

Ident. No.	Description					Price / EURO
L3.36500.B	ARRILITE 2000 Plus	MAN	blue	220 - 240 V~	bare ends	465,00 €
L3.36500.D	ARRILITE 2000 Plus	MAN	blue	220 - 240 V~	Schuko-Plug	465,00 €

COMPONENTS:

Ident. No.	Description	Price / EURO
L2.76522.0	4-leaf barndoor (235 mm / 9.3")	85,00 €
L2.76950.0	Set of 4 scrims (254 mm / 10.0")	95,00 €
L2.76950.A	Scrim, full single (254 mm / 10.0")	24,00 €
L2.76950.B	Scrim, full double (254 mm / 10.0")	25,00 €
L2.76950.C	Scrim, half single (254 mm / 10.0")	24,00 €
L2.76950.D	Scrim, half double (254 mm / 10.0")	25,00 €
L2.89061.0	Speed ring circular (9225) (255 mm / 10.0")	360,00 €
L2.89054.0	Chimera Lightbank Quartz Plus "S", incl. 3 front screens (8425)	700,00 €
L2.76571.0	Dichroic filter (254 mm / 10")	265,00 €
L2.77180.0	ARRI filter pack (Frost F2, Heavy Frost 129, Daylight Blue Frost 224, Daylight 3/4 Blue 201; each 2 x)	35,00 €
L2.76956.P	Case for 2 lampheads (70 x 39 x 37 cm)	320,00 €
L2.76976.0	Medium ARRI Kit Stand LS.2 (050A)	76,00 €
L2.8803653	Master Stand (1004BAC)	121,00 €

ARRILITE 2000 PLUS (CONTINUE)

COMPONENTS:

Ident. No.	Description	Price / EURO
L2.88679.0	Wheel set with brakes, Ø 75 mm / 22 mm mount (110)	79,00 €
L2.76985.0	ARRI Super Clamp (035)	28,00 €
L2.76986.0	Stud 16 mm with thread 3/8" (036-38), plugs into Superclamp (035)	6,00 €
L2.73408.0	Handgrip, 16 mm spigot size with thread 3/8", light weight	55,00 €
L2.89236.G	Lamp FEY 2000 W / 120V P2/27 (GE)	56,00 €
L2.89212.0	Lamp FEX 2000 W / 230 V RX7s P2/27 (Osram)	37,00 €
L2.89212.U	Lamp FEX 2000 W / 240 V R7s P2/27 (Ushio)	35,00 €



ARRI 150

Type of Lamphead:	**Fresnel, 150 W**
Lamp Type:	**150 W / 240 V; 150 W / 120 V; 100 W / 240 V**
Lamp Base:	**GX6,35**
Lens Diameter:	**50 mm**
Mounting:	**Socket 16 mm**
Size (HxWxL) / Packed Size:	**163 x 132 x 168 mm / 145 x 175 x 280 mm**
Packed Volume:	**0.007 m³**
Weight / Packed Weight:	**0.8 kg / 1.6 kg**
Protection Class / IP Rating:	**I / IP20**
Certifications:	**CE, CB, GS, cNTRLus**

TUNGSTEN FRESNEL LIGHTS

(cable length 3.5 m, with line switch or dimmer; incl. 4-leaf barndoor and filterframe)

Ident. No.	Description					Price / EURO
L3.79360.B	ARRI 150	with line switch	blue/silver	90 - 250 V~	bare ends	305,00 €
L3.79360.D	ARRI 150	with line switch	blue/silver	90 - 250 V~	Schuko-Plug	310,00 €
L3.79360.E	ARRI 150	with line dimmer	blue/silver	90 - 250 V~	bare ends	340,00 €
L3.79360.F	ARRI 150	with line dimmer	blue/silver	90 - 250 V~	Schuko-Plug	345,00 €

COMPONENTS:

Ident. No.	Description	Price / EURO
L2.79380.0	4-leaf barndoor (78 mm / 3.1")	40,00 €
L2.79395.0	Filter Frame (78 mm / 3.1")	14,00 €
L2.73466.0	Set of 4 scrims (78 mm / 3.1")	45,00 €
L2.73466.A	Scrim, full single (78 mm / 3.1")	12,00 €
L2.73466.B	Scrim, full double (78 mm / 3.1")	13,00 €
L2.73466.C	Scrim, half single (78 mm / 3.1")	12,00 €
L2.73466.D	Scrim, half double (78 mm / 3.1")	13,00 €
L2.79390.0	Snoot (78 mm / 3.1")	37,00 €
L2.76975.0	Small ARRI Kit Stand LS.1 (050KA)	79,00 €
L2.76965.0	Compact ARRI Kit Stand LS.01 (050MKA)	82,00 €
L2.88679.0	Wheel set with brakes, Ø 75 mm / 22 mm mount (110)	79,00 €
L2.76985.0	ARRI Super Clamp (035)	28,00 €
L2.76986.0	Stud 16 mm with thread 3/8" (036-38), plugs into Superclamp (035)	6,00 €
L2.76809.0	Safety cable (3 mm) 0,6 m, with "Kettbiner"	17,00 €
L2.89202.0	Lamp 150 W / 230 V GX6,35 (Osram)	19,00 €

ARRI 300 Plus



Type of Lamphead:	**Fresnel, 300 W**
Lamp Type:	**CP/81 FSL 300 W / 230 V** **CP/81 FKW 300 W / 120 V**
Lamp Base:	**GY 9,5**
Lens Diameter:	**80 mm**
Mounting:	**Socket 16 mm**
Size (HxWxL) /	**233 x 187 x 160 mm /**
Packed Size:	**275 x 190 x 240 mm**
Packed Volume:	**0.013 m³**
Weight / Packed Weight:	**1.8 kg / 2.9 kg**
Protection Class / IP Rating:	**I / IP20**
Certifications:	**CE, CB, GS, cNTRLus**

TUNGSTEN FRESNEL LIGHTS

(cable length 3.5 m, with line switch; incl. 4-leaf barndoor and filterframe)

Ident. No.	Description					Price / EURO
L3.79200.B	ARRI 300 Plus	MAN	blue/silver	90 - 250 V~	bare ends	360,00 €
L3.79200.D	ARRI 300 Plus	MAN	blue/silver	90 - 250 V~	Schuko-Plug	365,00 €
L3.79205.B	ARRI 300 Plus	MAN	black	90 - 250 V~	bare ends	360,00 €
L3.79205.D	ARRI 300 Plus	MAN	black	90 - 250 V~	Schuko-Plug	365,00 €

COMPONENTS:

Ident. No.	Description	Price / EURO
L2.79170.0	4-leaf barndoor (130 mm / 5.1")	45,00 €
L2.79190.0	Filter Frame (130 mm / 5.1")	19,00 €
L2.79160.0	Set of 4 scrims (130 mm / 5.1")	65,00 €
L2.79160.A	Scrim, full single (130 mm / 5.1")	17,00 €
L2.79160.B	Scrim, full double (130 mm / 5.1")	19,00 €
L2.79160.C	Scrim, half single (130 mm / 5.1")	17,00 €
L2.79160.D	Scrim, half double (130 mm / 5.1")	19,00 €
L2.89067.0	Speed ring circular (9640) (130 mm / 5.1")	98,00 €
L2.76719.0	Chimera Lightbank Video Pro Plus "XS", incl. 3 front screens (8115)	290,00 €
L2.70844.0	Chimera Lightbank Video Pro Plus "S", incl. 3 front screens (8125)	360,00 €
L2.79180.0	Snoot (130 mm / 5.1")	53,00 €
L2.88020.0	Soft bag for stands, gel rolls or frames	70,00 €
L2.76976.0	Medium ARRI Kit Stand LS.2 (050A)	76,00 €
L2.76965.0	Compact ARRI Kit Stand LS.01 (050MKA)	82,00 €

ARRI 300 Plus (CONTINUE)

COMPONENTS:

Ident. No.	Description	Price / EURO
L2.88679.0	Wheel set with brakes, Ø 75 mm / 22 mm mount (110)	79,00 €
L2.76985.0	ARRI Super Clamp (035)	28,00 €
L2.76986.0	Stud 16 mm with thread 3/8" (036-38), plugs into Superclamp (035)	6,00 €
L2.76809.0	Safety cable (3 mm) 0,6 m, with "Kettbiner"	17,00 €
L2.89203.G	Lamp T 300 W /240 V GY 9,5 CP/81 (GE)	18,00 €
L2.89203.0	Lamp T 300 W / 240 V GY 9,5 CP/81 (Osram)	18,00 €

ARRI 650 Plus



Type of Lamphead:	**Fresnel, 650 W**
Lamp Type:	**CP/89 FRL 650 W / 230 V; CP/89 FRK 650 W / 120 V; CP/82 500 W; CP/81 300 W**
Lamp Base:	**GY 9,5**
Lens Diameter:	**112 mm**
Mounting:	**Socket 16 mm**
Size (HxWxL) / Packed Size:	**276 x 220 x 190 mm / 295 x 220 x 255 mm**
Packed Volume:	**0.017 m³**
Weight / Packed Weight:	**2.6 kg / 3.5 kg**
Protection Class / IP Rating:	**I / IP20**
Certifications:	**CE, CB, GS, cNTRLus**

TUNGSTEN FRESNEL LIGHTS

(cable length 3 m, with line switch (MAN version), 2 m (P.O. version); incl. 4-leaf barndoor and filterframe)

Ident. No.	Description					Price / EURO
L3.79400.B	ARRI 650 Plus	MAN	blue/silver	90 - 250 V~	bare ends	385,00 €
L3.79400.D	ARRI 650 Plus	MAN	blue/silver	90 - 250 V~	Schuko-Plug	390,00 €
L3.79400.I	ARRI 650 Plus	P.O.	blue/silver	90 - 250 V~	bare ends	585,00 €
L3.79400.K	ARRI 650 Plus	P.O.	blue/silver	90 - 250 V~	Schuko-Plug	595,00 €
L3.79405.B	ARRI 650 Plus	MAN	black	90 - 250 V~	bare ends	385,00 €
L3.79405.D	ARRI 650 Plus	MAN	black	90 - 250 V~	Schuko-Plug	390,00 €
L3.79405.K	ARRI 650 Plus	P.O.	black	90 - 250 V~	Schuko-Plug	595,00 €

COMPONENTS:

Ident. No.	Description	Price / EURO
L2.79470.0	4-leaf barndoor (168 mm / 6.6")	59,00 €
L2.79471.0	4-leaf barndoor, black/silver (168 mm / 6.6")	115,00 €
L2.79500.0	8-leaf barndoor (168 mm / 6.6")	110,00 €
L2.79490.0	Filter Frame (168 mm / 6.6")	20,00 €
L2.79460.0	Set of 4 scrims (168 mm / 6.6")	75,00 €
L2.79460.A	Scrim, full single (168 mm / 6.6")	19,00 €
L2.79460.B	Scrim, full double (168 mm / 6.6")	22,00 €
L2.79460.C	Scrim, half single (168 mm / 6.6")	19,00 €
L2.79460.D	Scrim, half double (168 mm / 6.6")	22,00 €

ARRI 650 PLUS (CONTINUE)

COMPONENTS:

Ident. No.	Description	Price / EURO
L2.89068.0	Speed ring circular (9670) (168 mm / 6.6")	115,00 €
L2.89074.0	Speed ring circular metal (9670AL) (168 mm / 6.6")	150,00 €
L2.89069.0	Speed ring circular (9672) (168 mm / 6.6")	150,00 €
L2.70844.0	Chimera Lightbank Video Pro Plus "S", incl. 3 front screens (8125)	360,00 €
L2.79480.0	Snoot (168 mm / 6.6")	65,00 €
L2.88020.0	Soft bag for stands, gel rolls or frames	70,00 €
L2.76976.0	Medium ARRI Kit Stand LS.2 (050A)	76,00 €
L2.76965.0	Compact ARRI Kit Stand LS.01 (050MKA)	82,00 €
L2.88679.0	Wheel set with brakes, Ø 75 mm / 22 mm mount (110)	79,00 €
L2.76985.0	ARRI Super Clamp (035)	28,00 €
L2.76986.0	Stud 16 mm with thread 3/8" (036-38), plugs into Superclamp (035)	6,00 €
L2.76809.0	Safety cable (3 mm) 0,6 m, with "Kettbiner"	17,00 €
L2.89205.0	Lamp 650 W / 230 V GY9,5 FRL CP89 (Osram)	25,00 €

TRUE BLUE® T1



Type of Lamphead:	**Fresnel, 1000 W**
Lamp Type:	**CP/40 FKJ 1000 W, 230 V**
	CP/71 FKJ 1000 W, 230 V
Lamp Base:	**G22**
Lens Diameter:	**150 mm**
Mounting:	**Spigot 28 mm (short), 16 mm Socket**
Size (HxWxL) /	**357 x 323 x 216 mm /**
Packed Size:	**330 x 395 x 390 mm**
Packed Volume:	**0.05 m³**
Weight / Packed Weight:	**6.0 kg / 7.0 kg**
Protection Class / IP Rating:	**I / IP23**
Certifications:	**CE, CB, GS, cNTRLus**

TRUE BLUE® TUNGSTEN FRESNEL LIGHTS

(cable length 3 m, with line switch (MAN version), 1.5 m (P.O. version); incl. 4-leaf barndoor and filterframe)

Ident. No.	Description					Price / EURO
L3.39610.B	True Blue® T1	MAN	blue/silver	220 - 250 V~	bare ends	610,00 €
L3.39610.D	True Blue® T1	MAN	blue/silver	220 - 250 V~	Schuko-Plug	620,00 €
L3.39610.I	True Blue® T1	P.O.	blue/silver	220 - 250 V~	bare ends	770,00 €
L3.39615.B	True Blue® T1	MAN	black	220 - 250 V~	bare ends	610,00 €
L3.39615.D	True Blue® T1	MAN	black	220 - 250 V~	Schuko-Plug	620,00 €
L3.39615.I	True Blue® T1	P.O.	black	220 - 250 V~	bare ends	770,00 €

COMPONENTS:

Ident. No.	Description	Price / EURO
L2.39670.0	4-leaf barndoor, True Blue® (197 mm / 7.8")	80,00 €
L2.39700.0	8-leaf barndoor, True Blue® (197 mm / 7.8")	120,00 €
L2.79690.0	Filter Frame (197 mm / 7.8")	21,00 €
L2.79660.0	Set of 4 scrims (197 mm / 7.8")	90,00 €
L2.79660.A	Scrim, full single (197 mm / 7.8")	23,00 €
L2.79660.B	Scrim, full double (197 mm / 7.8")	25,00 €
L2.79660.C	Scrim, half single (197 mm / 7.8")	23,00 €
L2.79660.D	Scrim, half double (197 mm / 7.8")	25,00 €
L2.76246.0	Speed ring circular (9190) (197 mm / 7.8")	180,00 €
L2.70844.0	Chimera Lightbank Video Pro Plus "S", incl. 3 front screens (8125)	360,00 €
L2.89060.0	Speed ring circular (9192) (197 mm / 7.8")	180,00 €
L2.89053.0	Chimera Lightbank Daylite Junior Plus "S", incl. 3 front screens (8225)	475,00 €

TRUE BLUE® T1 (CONTINUE)

COMPONENTS:

Ident. No.	Description	Price / EURO
L2.79680.0	Snoot (197 mm / 7.8") with variable aperture	85,00 €
L2.76956.P	Case for 2 lampheads (70 x 39 x 37 cm)	320,00 €
L2.8803653	Master Stand (1004BAC)	121,00 €
L2.88717.0	Universal ARRI Cine Stand LS.4 (007BA)	156,00 €
L2.88679.0	Wheel set with brakes, Ø 75 mm / 22 mm mount (110)	79,00 €
L2.76985.0	ARRI Super Clamp (035)	28,00 €
L2.40703.1	Spigot 28 mm, long, with flange & allen screw, fits profile stirrups without sleeve cuff	15,00 €
L2.76990.0	Safety cable (4 mm) 1 m, with "Kettbiner"	22,00 €
L2.39712.0	Conversion Kit from True Blue® T1 MAN to P.O. version: stirrup for pole operated pan, tilt and focus	220,00 €
L2.80575.0	CEE-connector 16 A / 230 V 1Ph+PE (assembled when ordered with lamphead)	40,00 €
L2.33835.0	Mains indicator (green diode in cable entry) 230 V for T1, ST1, T2, ST2 (mounted when ordered with luminaire)	40,00 €
L2.89208.0	Lamp 1000 W / 230 V G22 FKJ CP71 (Osram)	20,00 €

TRUE BLUE® T2



Type of Lamphead:	**Fresnel, 2000 W**
Lamp Type:	**CP/41 FKK 2000 W /230 V ; CP/73 FKK 2000 W / 230 V**
Lamp Base:	**G38**
Lens Diameter:	**175 mm**
Mounting:	**Spigot 28 mm**
Size (HxWxL) / Packed Size:	**398 x 375 x 315 mm / 395 x 405 x 470 mm**
Packed Volume:	**0.08 m³**
Weight / Packed Weight:	**7.0 kg / 9.6 kg**
Protection Class / IP Rating:	**I / IP23**
Certifications:	**CE, CB, GS, cNTRLus**

TRUE BLUE® TUNGSTEN FRESNEL LIGHTS

(cable length 3 m, with line switch (MAN version), 1.5 m (P.O. version); incl. 4-leaf barndoor and filterframe)

Ident. No.	Description					Price / EURO
L3.41250.B	True Blue® T2	MAN	blue/silver	220 - 250 V~	bare ends	750,00 €
L3.41250.D	True Blue® T2	MAN	blue/silver	220 - 250 V~	Schuko-Plug	760,00 €
L3.41250.I	True Blue® T2	P.O.	blue/silver	220 - 250 V~	bare ends	925,00 €
L3.41255.B	True Blue® T2	MAN	black	220 - 250 V~	bare ends	750,00 €
L3.41255.D	True Blue® T2	MAN	black	220 - 250 V~	Schuko-Plug	760,00 €
L3.41255.I	True Blue® T2	P.O.	black	220 - 250 V~	bare ends	1.020,00 €

COMPONENTS:

Ident. No.	Description	Price / EURO
L2.39870.0	4-leaf barndoor, True Blue® (245 mm / 9.7")	90,00 €
L2.39900.0	8-leaf barndoor, True Blue® (245 mm / 9.7")	150,00 €
L2.79890.0	Filter Frame (230 mm / 9.1")	26,00 €
L2.79860.0	Set of 4 scrims (230 mm / 9.1")	90,00 €
L2.79860.A	Scrim, full single (230 mm / 9.1")	23,00 €
L2.79860.B	Scrim, full double (230 mm / 9.1")	24,00 €
L2.79860.C	Scrim, half single (230 mm / 9.1")	23,00 €
L2.79860.D	Scrim, half double (230 mm / 9.1")	24,00 €
L2.76248.0	Speed ring circular (9205) (245 mm / 9.7")	390,00 €
L2.79880.0	Snoot (245 mm / 9.7") with variable aperture	105,00 €
L2.88717.0	Universal ARRI Cine Stand LS.4 (007BA)	156,00 €
L2.88679.0	Wheel set with brakes, Ø 75 mm / 22 mm mount (110)	79,00 €

TRUE BLUE® T2 (CONTINUE)

COMPONENTS:

Ident. No.	Description	Price / EURO
L2.76989.0	ARRI Swivelling C Clamp (C150)	119,00 €
L2.76990.0	Safety cable (4 mm) 1 m, with "Kettbiner"	22,00 €
L2.33811.0	Conversion Kit from True Blue® ST1 and T2 to Theater version: Theater cassette with barndoor insert	330,00 €
L2.80575.0	CEE-connector 16 A / 230 V 1Ph+PE (assembled when ordered with lamphead)	40,00 €
L2.33835.0	Mains indicator (green diode in cable entry) 230 V for T1, ST1, T2, ST2 (mounted when ordered with luminaire)	40,00 €
L2.89213.0	Lamp 2000 W / 230 V G38 FKK CP73 (Osram)	35,00 €



TRUE BLUE® T5

Type of Lamphead:	**Fresnel, 5000 W**
Lamp Type:	**CP/29 5000 W / 230 V ; CP/85 5000 W / 230 V**
Lamp Base:	**G38**
Lens Diameter:	**250 mm**
Mounting:	**Spigot 28 mm**
Size (HxWxL) / Packed Size:	**522 x 465 x 390 mm / 495 x 510 x 555 mm**
Packed Volume:	**0.14 m³**
Weight / Packed Weight:	**11.5 kg / 16.8 kg**
Protection Class / IP Rating:	**I / IP23**
Certifications:	**CE, CB, GS, cNTRLus**

TRUE BLUE® TUNGSTEN FRESNEL LIGHTS

(cable length 3 m, with line switch; incl. 4-leaf barndoor and filterframe)

Ident. No.	Description					Price / EURO
L3.40000.B	True Blue® T5	MAN	blue/silver	220 - 250 V~	bare ends	1.195,00 €
L3.40005.B	True Blue® T5	MAN	black	220 - 250 V~	bare ends	1.195,00 €

COMPONENTS:

Ident. No.	Description	Price / EURO
L2.40950.0	4-leaf barndoor, True Blue® (344 mm / 13.5")	100,00 €
L2.40960.0	8-leaf barndoor, True Blue® (344 mm / 13.5")	210,00 €
L2.80970.0	Filter Frame (330 mm / 13.0")	38,00 €
L2.80980.0	Set of 4 scrims (330 mm / 13.0")	135,00 €
L2.80980.A	Scrim, full single (330 mm / 13.0")	35,00 €
L2.80980.B	Scrim, full double (330 mm / 13.0")	40,00 €
L2.80980.C	Scrim, half single (330 mm / 13.0")	35,00 €
L2.80980.D	Scrim, half double (330 mm / 13.0")	40,00 €
L2.76247.0	Speed ring circular (9305) (343 mm / 13.5")	360,00 €
L2.89054.0	Chimera Lightbank Quartz Plus "S", incl. 3 front screens (8425)	700,00 €
L2.89058.0	Chimera Lightbank Daylite Plus "M", incl. 3 front screens (8635)	1.120,00 €
L2.80975.0	Snoot (344 mm / 13.5") with variable aperture	120,00 €
L2.76979.0	Universal ARRI Steel Stand LS.5 (126A)	198,00 €
L2.88679.0	Wheel set with brakes, Ø 75 mm / 22 mm mount (110)	79,00 €
L2.76989.0	ARRI Swivelling C Clamp (C150)	119,00 €

TRUE BLUE® T5 (CONTINUE)

COMPONENTS:

Ident. No.	Description	Price / EURO
L2.76990.0	Safety cable (4 mm) 1 m, with "Kettbiner"	22,00 €
L2.80864.0	Safety cable (5 mm) 1 m, with "Kettbiner"	20,00 €
L2.89214.0	Lamp 5000 W / 230 V G38 CP85 (Osram)	130,00 €
L2.89214.P	Lamp 5000 W / 240 V G38 CP85 (Philips)	130,00 €

TRUE BLUE® ST1



Type of Lamphead:	**Fresnel, 1000 W**
Lamp Type:	**CP/40 FKJ 1000 W / 230 V** **CP/71 FKJ 1000 W / 230 V**
Lamp Base:	**G22**
Lens Diameter:	**175 mm**
Mounting:	**Spigot 28 mm**
Size (HxWxL) /	**398 x 362 x 325 mm /**
Packed Size:	**395 x 405 x 475 mm**
Packed Volume:	**0.08 m³**
Weight / Packed Weight:	**7.0 kg / 9.2 kg**
Protection Class / IP Rating:	**I / IP23**
Certifications:	**CE, CB, GS, cNTRLus**

TRUE BLUE® TUNGSTEN FRESNEL LIGHTS

(cable length 1.5 m*; incl. 4-leaf barndoor and filterframe**)

	Ident. No.	Description					Price / EURO	
	L3.40500.B	True Blue® ST1	MAN	blue/silver	220 - 250 V~	bare ends	660,00	€
	L3.40500.D	True Blue® ST1	MAN	blue/silver	220 - 250 V~	Schuko-Plug	670,00	€
	L3.40500LB	True Blue® ST1	MAN Location*	blue/silver	220 - 250 V~	bare ends	720,00	€
NEW	L1.40501.B	True Blue® ST1	MAN	silver**	220 - 250 V~	bare ends	650,00	€
	L3.40505.B	True Blue® ST1	MAN	black	220 - 250 V~	bare ends	660,00	€
	L3.40505.D	True Blue® ST1	MAN	black	220 - 250 V~	Schuko-Plug	670,00	€
	L3.40500.I	True Blue® ST1	P.O.	blue/silver	220 - 250 V~	bare ends	855,00	€
	L3.40500.K	True Blue® ST1	P.O.	blue/silver	220 - 250 V~	Schuko-Plug	865,00	€
	L3.40505.I	True Blue® ST1	P.O.	black	220 - 250 V~	bare ends	855,00	€
	L3.40505.K	True Blue® ST1	P.O.	black	220 - 250 V~	Schuko-Plug	865,00	€
	L3.40505.L	True Blue® ST1/2	P.O.	black	220 - 250 V~	bare ends	960,00	€

* MAN Location version equipped with 3 m cable and line switch

** silver version without barndoor and filter frame

COMPONENTS:

Ident. No.	Description	Price / EURO	
L2.39870.0	4-leaf barndoor, True Blue® (245 mm / 9.7")	90,00	€
L2.39900.0	8-leaf barndoor, True Blue® (245 mm / 9.7")	150,00	€
L2.79890.0	Filter Frame (230 mm / 9.1")	26,00	€

TRUE BLUE® ST1 (CONTINUE)

COMPONENTS:

Ident. No.	Description	Price / EURO
L2.79860.0	Set of 4 scrims (230 mm / 9.1")	90,00 €
L2.79860.A	Scrim, full single (230 mm / 9.1")	23,00 €
L2.79860.B	Scrim, full double (230 mm / 9.1")	24,00 €
L2.79860.C	Scrim, half single (230 mm / 9.1")	23,00 €
L2.79860.D	Scrim, half double (230 mm / 9.1")	24,00 €
L2.76248.0	Speed ring circular (9205) (245 mm / 9.7")	390,00 €
L2.79880.0	Snoot (245 mm / 9.7") with variable aperture	105,00 €
L2.8803224	Combo Steel Stand (A1035CS)	344,00 €
L2.88717.0	Universal ARRI Cine Stand LS.4 (007BA)	156,00 €
L2.88679.0	Wheel set with brakes, Ø 75 mm / 22 mm mount (110)	79,00 €
L2.76980.0	Wheel set with brakes, Ø 125 mm / 25 x 25 mm square mount (90000A)	128,00 €
L2.76989.0	ARRI Swivelling C Clamp (C150)	119,00 €
L2.76990.0	Safety cable (4 mm) 1 m, with "Kettbiner"	22,00 €
L2.33811.0	Conversion Kit from True Blue® ST1 and T2 to Theater version: Theater cassette with barndoor insert	330,00 €
L2.80575.0	CEE-connector 16 A / 230 V 1Ph+PE (assembled when ordered with lamphead)	40,00 €
L2.33835.0	Mains indicator (green diode in cable entry) 230 V for T1, ST1, T2, ST2 (mounted when ordered with luminaire)	40,00 €
L2.89208.0	Lamp 1000 W / 230 V G22 FKJ CP71 (Osram)	20,00 €

TRUE BLUE® ST2/3



Type of Lamphead:	**Fresnel, 2000 W**
Lamp Type:	**CP/41 FKK 2000 W / 230 V; CP/73 FKK 2000 W / 230 V; HX48 3000 W / 230 - 240 V**
Lamp Base:	**G38**
Lens Diameter:	**250 mm**
Mounting:	**Spigot 28 mm**
Size (HxWxL) / Packed Size:	**522 x 448 x 380 mm / 495 x 515 x 550 mm**
Packed Volume:	**0.14 m³**
Weight / Packed Weight:	**12.0 kg / 15.0 kg**
Protection Class / IP Rating:	**I / IP23**
Certifications:	**CE, CB, GS**

TRUE BLUE® TUNGSTEN FRESNEL LIGHTS

(cable length 1.5 m*; incl. 4-leaf barndoor and filterframe)

	Ident. No.	Description					Price / EURO	
	L3.40750.B	True Blue® ST2/3	MAN	blue/silver	220 - 250 V~	bare ends	990,00	€
	L3.40750.D	True Blue® ST2/3	MAN	blue/silver	220 - 250 V~	Schuko-Plug	1.000,00	€
	L3.40750LB	True Blue® ST2/3	MAN Location*	blue/silver	220 - 250 V~	bare ends	1.025,00	€
NEW	L1.40751.B	True Blue® ST2/3	MAN**	silver	220 - 250 V~	bare ends	915,00	€
	L3.40755.B	True Blue® ST2/3	MAN	black	220 - 250 V~	bare ends	990,00	€
	L3.40755.D	True Blue® ST2/3	MAN	black	220 - 250 V~	Schuko-Plug	1.000,00	€
	L3.40750.I	True Blue® ST2/3	P.O.	blue/silver	220 - 250 V~	bare ends	1.205,00	€
	L3.40750.K	True Blue® ST2/3	P.O.	blue/silver	220 - 250 V~	Schuko-Plug	1.215,00	€
	L3.40755.I	True Blue® ST2/3	P.O.	black	220 - 250 V~	bare ends	1.205,00	€
	L3.40755.K	True Blue® ST2/3	P.O.	black	220 - 250 V~	Schuko-Plug	1.215,00	€

* MAN Location version equipped with 3 m cable, line switch and location top latch

** silver version without barndoor and filter frame

COMPONENTS:

Ident. No.	Description	Price / EURO	
L2.40950.0	4-leaf barndoor, True Blue® (344 mm / 13.5")	100,00	€
L2.40960.0	8-leaf barndoor, True Blue® (344 mm / 13.5")	210,00	€
L2.80970.0	Filter Frame (330 mm / 13.0")	38,00	€

TRUE BLUE® ST2/3 (CONTINUE)

COMPONENTS:

Ident. No.	Description	Price / EURO
L2.80980.0	Set of 4 scrims (330 mm / 13.0")	135,00 €
L2.80980.A	Scrim, full single (330 mm / 13.0")	35,00 €
L2.80980.B	Scrim, full double (330 mm / 13.0")	40,00 €
L2.80980.C	Scrim, half single (330 mm / 13.0")	35,00 €
L2.80980.D	Scrim, half double (330 mm / 13.0")	40,00 €
L2.76247.0	Speed ring circular (9305) (343 mm / 13.5")	360,00 €
L2.89054.0	Chimera Lightbank Quartz Plus "S", incl. 3 front screens (8425)	700,00 €
L2.80975.0	Snoot (344 mm / 13.5") with variable aperture	120,00 €
L2.76979.0	Universal ARRI Steel Stand LS.5 (126A)	198,00 €
L2.88679.0	Wheel set with brakes, Ø 75 mm / 22 mm mount (110)	79,00 €
L2.76989.0	ARRI Swivelling C Clamp (C150)	119,00 €
L2.76990.0	Safety cable (4 mm) 1 m, with "Kettbiner"	22,00 €
L2.80864.0	Safety cable (5 mm) 1 m, with "Kettbiner"	20,00 €
L2.80575.0	CEE-connector 16 A / 230 V 1Ph+PE (assembled when ordered with lamphead)	40,00 €
L2.33835.0	Mains indicator (green diode in cable entry) 230 V for T1, ST1, T2, ST2 (mounted when ordered with luminaire)	40,00 €
L2.89213.G	Lamp 2000 W / 230 V G38 FKK CP41 (GE)	35,00 €
L2.89213.0	Lamp 2000 W / 230 V G38 FKK CP73 (Osram)	35,00 €



TRUE BLUE® ST5

Type of Lamphead:	**Fresnel, 5000 W**
Lamp Type:	**CP/85 5000 W / 230 V ; CP/29 5000 W / 230 V**
Lamp Base:	**G38**
Lens Diameter:	**300 mm**
Mounting:	**Spigot 28 mm**
Size (HxWxL) / Packed Size:	**595 x 518 x 393 mm / 575 x 605 x 605 mm**
Packed Volume:	**0.21 m³**
Weight / Packed Weight:	**15.0 kg / 20.0 kg**
Protection Class / IP Rating:	**I / IP23**
Certifications:	**CE, CB, GS, cNTRLus**

TRUE BLUE® TUNGSTEN FRESNEL LIGHTS

(cable length 1.5 m*; incl. 4-leaf barndoor and filterframe)

Ident. No.	Description					Price / EURO
L3.41000.B	True Blue® ST5	MAN	blue/silver	220 - 250 V~	bare ends	1.285,00 €
L3.41000.I	True Blue® ST5	P.O.	blue/silver	220 - 250 V~	bare ends	1.500,00 €
L3.41005.B	True Blue® ST5	MAN	black	220 - 250 V~	bare ends	1.285,00 €
L3.41005.I	True Blue® ST5	P.O.	black	220 - 250 V~	bare ends	1.500,00 €
L3.41000LB	True Blue® ST5	MAN Location*	blue/silver	220 - 250 V~	bare ends	1.390,00 €

* MAN Location version equipped with 3 m cable, line switch and location top latch

COMPONENTS:

Ident. No.	Description	Price / EURO
L2.41200.0	4-leaf barndoor, True Blue® (413 mm / 16.3")	120,00 €
L2.81210.0	8-leaf barndoor (413 mm / 16.3")	230,00 €
L2.81220.0	Filter Frame (400 mm / 15.8")	40,00 €
L2.34065.0	Conversion Kit from True Blue® ST5 to Theater version: Theater cassette with barndoor insert	470,00 €
L2.81230.0	Set of 4 scrims (400 mm / 15.8")	155,00 €
L2.81230.A	Scrim, full single (400 mm / 15.8")	40,00 €
L2.81230.B	Scrim, full double (400 mm / 15.8")	45,00 €
L2.81230.C	Scrim, half single (400 mm / 15.8")	40,00 €
L2.81230.D	Scrim, half double (400 mm / 15.8")	45,00 €

TRUE BLUE® ST5 (CONTINUE)

COMPONENTS:

Ident. No.	Description	Price / EURO
L2.89062.0	Speed ring circular (9365) (411 mm / 16.2")	420,00 €
L2.89058.0	Chimera Lightbank Daylite Plus "M", incl. 3 front screens (8635)	1.120,00 €
L2.89059.0	Chimera Lightbank Daylite Plus "L", incl. 3 front screens (8645)	1.700,00 €
L2.81225.0	Snoot (413 mm / 16.3") with variable aperture	245,00 €
L2.8803225	Combo Alu Stand (A1035B)	344,00 €
L2.8800561	ARRI Wind-up Stand LS.6 (083NWA)	565,00 €
L2.76959.0	Wheel set with brakes, Ø 75 mm / M10 mount with brakes (104)	70,00 €
L2.88706.0	Wheel set with brakes, Ø 125 mm / M10 mount with brakes (251)	114,00 €
L2.88096.0	Wheel set with brakes, Ø 160 mm / M10 mount with brakes (374)	268,00 €
L2.76989.0	ARRI Swivelling C Clamp (C150)	119,00 €
L2.80864.0	Safety cable (5 mm) 1 m, with "Kettbiner"	20,00 €
L2.89214.0	Lamp 5000 W / 230 V G38 CP85 (Osram)	130,00 €
L2.89214.P	Lamp 5000 W / 240 V G38 CP85 (Philips)	130,00 €



TRUE BLUE® ST1/2 THEATER

Type of Lamphead:	**Fresnel, 1000 W**
Lamp Type:	**CP/40 1000 W / 230 V Monoplane ; CP/71 1000 W / 230 V Biplane ; CP/41 2000 W / 230 V Monoplane ; CP/73 2000 W / 230 V Biplane**
Lamp Base:	**G38/G22**
Lens Diameter:	**175 mm**
Mounting:	**Spigot 28 mm**
Size (HxWxL) / Packed Size:	**398 x 374 x 309 mm / 460 x 400 x 520 mm**
Packed Volume:	**0.10 m³**
Weight / Packed Weight:	**8.1 kg / 10.5 kg**
Protection Class / IP Rating:	**I / IP23**
Certifications:	**CE, CB, GS**

TRUE BLUE® TUNGSTEN FRESNEL LIGHTS FOR THEATER

(cable length 1.5 m; incl. spill light frame and Theater cassette, without barndoor)

Ident. No.	Description					Price / EURO
L1.40515.B	True Blue® ST1/2 Theater	MAN	black	220 - 250 V~	bare ends	1.080,00 €
L1.40525.B	True Blue® ST1/2 Theater	MOT*	black	220 - 250 V~	bare ends	1.005,00 €

*lamphead without stirrup; suitable for mounting of a motorized yoke by Licht-Technik

COMPONENTS:

Ident. No.	Description	Price / EURO
L2.33817.0	Spill Light Frame (245 mm / 9.7")	30,00 €
L2.76990.0	Safety cable (4 mm) 1 m, with "Kettbiner"	22,00 €
L2.80575.0	CEE-connector 16 A / 230 V 1Ph+PE (assembled when ordered with lamphead)	40,00 €
L2.33835.0	Mains indicator (green diode in cable entry) 230 V for T1, ST1, T2, ST2 (mounted when ordered with luminaire)	40,00 €
L2.89208.0	Lamp 1000 W / 230 V G22 FKJ CP71 (Osram)	20,00 €



TRUE BLUE® ST5 THEATER

Type of Lamphead:	**Fresnel, 5000 W**
Lamp Type:	**CP/85 5000 W / 230 V ; CP/29 5000 W / 230 V**
Lamp Base:	**G38**
Lens Diameter:	**300 mm**
Mounting:	**Spigot 28 mm**
Size (HxWxL) /	**705 x 534 x 427 mm /**
Packed Size:	**600 x 600 x 750 mm**
Packed Volume:	**0.27 m³**
Weight / Packed Weight:	**21.8 kg / 25.3 kg**
Protection Class / IP Rating:	**I / IP23**
Certifications:	**CE, CB, GS, cNTRLus**

TRUE BLUE® TUNGSTEN FRESNEL LIGHTS FOR THEATER

(cable length 1.5 m (MAN) and 3 m (MOT); incl. spill light frame and Theater cassette, without barndoor)

Ident. No.	Description					Price / EURO
L1.41015.B	True Blue® ST5 Theater	MAN	black	220 - 250 V~	bare ends	1.800,00 €
L1.41025.B	True Blue® ST5 Theater	MOT	black	220 - 250 V~	bare ends	1.645,00 €

*lamphead without stirrup; suitable for mounting of a motorized yoke by Licht-Technik

COMPONENTS:

Ident. No.	Description	Price / EURO
L2.34067.0	Spill Light Frame (413 mm / 16.3")	45,00 €
L2.80864.0	Safety cable (5 mm) 1 m, with "Kettbiner"	20,00 €
L2.80866.0	Safety cable (6 mm) 1 m, with "Kettbiner"	21,00 €
L2.89214.0	Lamp 5000 W / 230 V G38 CP85 (Osram)	130,00 €
L2.89214.P	Lamp 5000 W / 240 V G38 CP85 (Philips)	130,00 €

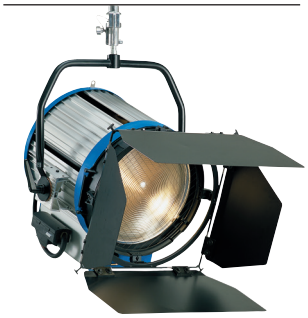

STUDIO T 12®

Type of Lamphead:	**Fresnel, 12000 W**
Lamp Type:	**12000 W / 230 V monoplane ; CP/83 10000 W / 230 V monoplane**
Lamp Base:	**G38**
Lens Diameter:	**420 mm**
Mounting:	**Spigot 28 mm**
Size (HxWxL) /	**748 x 682 x 562 mm /**
Packed Size:	**695 x 725 x 780 mm**
Packed Volume:	**0.39 m³**
Weight / Packed Weight:	**25.0 kg / 31.5 kg**
Protection Class / IP Rating:	**I / IP20**
Certifications:	**CE, CB, GS, cNTRLus**

TUNGSTEN FRESNEL LIGHTS

(cable length 4 m, incl. 4-leaf barndoor)

Ident. No.	Description					Price / EURO
L0.82120.B	STUDIO T 12®	MAN	blue/silver	220 - 250 V~	bare ends	3.200,00 €

COMPONENTS:

Ident. No.	Description	Price / EURO
L2.82150.0	4-leaf barndoor (510 mm / 20.1")	410,00 €
L2.82155.0	Filter Frame (495 mm / 19.5")	105,00 €
L2.82160.0	Set of 4 scrims (495 mm / 19.5")	205,00 €
L2.82160.A	Scrim, full single (495 mm / 19.5")	55,00 €
L2.82160.B	Scrim, full double (495 mm / 19.5")	55,00 €
L2.82160.C	Scrim, half single (495 mm / 19.5")	55,00 €
L2.82160.D	Scrim, half double (495 mm / 19.5")	55,00 €
L2.89063.0	Speed ring circular (9435) (508 mm / 20.0")	420,00 €
L2.89059.0	Chimera Lightbank Daylite Plus "L", incl. 3 front screens (8645)	1.700,00 €
L2.8800561	ARRI Wind-up Stand LS.6 (083NWA)	565,00 €
L2.76959.0	Wheel set with brakes, Ø 75 mm / M10 mount with brakes (104)	70,00 €
L2.88706.0	Wheel set with brakes, Ø 125 mm / M10 mount with brakes (251)	114,00 €
L2.88096.0	Wheel set with brakes, Ø 160 mm / M10 mount with brakes (374)	268,00 €
L2.76989.0	ARRI Swivelling C Clamp (C150)	119,00 €
L2.80866.0	Safety cable (6 mm) 1 m, with "Kettbiner"	21,00 €
NEW L2.0000885	T12 Top latch for heavy accessories	155,00 €
L2.89217.G	Lamp 12000 W / 240 V GX38 Q12MT26/CL (GE)	880,00 €
L2.89265.G	Lamp 12000 W / 230 V G38 KP120Q12MT26/CL (GE)	880,00 €



STUDIO T 24®

Type of Lamphead:	**Fresnel, 24000 W**
Lamp Type:	**24000 W / 240 V monoplane ; 20000 W / 230 V CP/99 monoplane**
Lamp Base:	**G38**
Lens Diameter:	**625 mm**
Mounting:	**Spigot 28 mm**
Size (HxWxL) /	**1068 x 1040 x 830 mm**
Packed Size:	**1135 x 1050 x 1170 mm**
Packed Volume:	**1.39 m³**
Weight / Packed Weight:	**60.6 kg / 114 kg (with pallet)**
Protection Class / IP Rating:	**I / IP20**
Certifications:	**CE, CB, GS, cNTRLus**

TUNGSTEN FRESNEL LIGHTS

(cable length 1 m, without barndoor)

Ident. No.	Description					Price / EURO
L1.82270.B	STUDIO T 24®	MAN	blue/silver	220 - 250 V~	International (VEAM)	9.790,00 €
L0.82270.D	STUDIO T 24® Set*	MAN	blue/silver	220 - 250 V~	International (VEAM)	16.325,00 €

* Set incl. lamphead, 4-leaf barndoor, dimmer, mains and dimmer cable with International connector (VEAM)

COMPONENTS:

Ident. No.	Description	Price / EURO
L2.71100.0	4-leaf barndoor (740 mm / 29.1")	635,00 €
L2.71110.0	Filter Frame (740 mm / 29.1")	170,00 €
L2.71115.0	Set of 4 scrims (740 mm / 29.1")	325,00 €
L2.71115.A	Scrim, full single (740 mm / 29.1")	80,00 €
L2.71115.B	Scrim, full double (740 mm / 29.1")	85,00 €
L2.71115.C	Scrim, half single (740 mm / 29.1")	80,00 €
L2.71115.D	Scrim, half double (740 mm / 29.1")	85,00 €
L2.89064.0	Speed ring circular (9464) (735 mm / 29.0")	460,00 €
L2.82765.0	Retrofit lampcarriage with fan for STUDIO T 24® (220/230 V~ version)	1.620,00 €
L2.83396.0	Retrofit lampcarriage with fan for STUDIO T 24® (200 V~ version)	1.620,00 €
L2.82294.0	Head-to-Ballast/Dimmer cable 12/18/24 kW, 15 m, International connector (VEAM)	970,00 €
L2.82294.A	Head-to-Ballast/Dimmer cable 12/18/24 kW, 20 m, International connector (VEAM)	1.240,00 €
L2.82297.0	Mains cable 125 A / 230 V, 7 m, International connector (Cannon) / CEE blue)	800,00 €

STUDIO T 24® (CONTINUE)

COMPONENTS:

Ident. No.	Description	Price / EURO
L2.82296.0	Dimmer ADM 24, 24 kW / 230 V, with lamp hour counter, XLR-5 pin connector for remote control, pre-heat function, international connector, blue standard housing with handle	4.130,00 €
L2.89218.0	Lamp 20000 W / 230 V G38 CP99 (Osram)	2.310,00 €
L2.89219.K	Lamp 24000 W / 240 V GX38 Q24MT32/CL (GE)	3.735,00 €



CYC FLOODLIGHT

Type of Lamphead:	**Flood, 1250 W (single)**
Lamp Type:	**P2/12 1250 W / 230 V; P2/10 650 W / 230 V ; 1000 W R7s 230 V**
Lamp Base:	**R7s (189 mm)**
Mounting:	**P.O. version: 28 mm spigot MAN version: not included in delivery**
Size (HxWxL) / Packed Size:	**408 x 394,5 x 219 mm / 420 x 410 x 510 mm**
Packed Volume:	**0.88 m³**
Weight / Packed Weight:	**4.0 kg / 6.0 kg**
Protection Class / IP Rating:	**I / IP20**
Certifications:	**CE**

TUNGSTEN BROAD LIGHTS

(cable length 0.8 m; 28 mm Spigot at P.O. version only; without barndoor)

Ident. No.	Description					Price / EURO
L1.84300.B	FLOOD 1250 Single	MAN	black	220 - 250 V~	bare ends	390,00 €
L1.84300.I	FLOOD 1250 Single	P.O.	black	220 - 250 V~	bare ends	500,00 €
L1.84200.B	CYC 1250 Single	MAN	black	220 - 250 V~	bare ends	390,00 €
L1.84200.I	CYC 1250 Single	P.O.	black	220 - 250 V~	bare ends	500,00 €
L1.84210.B	CYC 1250 2-Bank Line	MAN	black	220 - 250 V~	bare ends	685,00 €
L1.84210.I	CYC 1250 2-Bank Line	P.O.	black	220 - 250 V~	bare ends	820,00 €
L1.84230.B	CYC 1250 4-Cube	MAN	black	220 - 250 V~	bare ends	1.310,00 €
L1.84230.I	CYC 1250 4-Cube	P.O.	black	220 - 250 V~	bare ends	1.475,00 €

COMPONENTS:

Ident. No.	Description	Price / EURO
L2.84240.0	4-leaf barndoor for CYC FLOOD	105,00 €
L2.84245.0	Filter Frame for Cyc/Flood	48,00 €
L2.88717.0	Universal ARRI Cine Stand LS.4 (007BA)	156,00 €
L2.88679.0	Wheel set with brakes, Ø 75 mm / 22 mm mount (110)	79,00 €
L2.76989.0	ARRI Swivelling C Clamp (C150)	119,00 €
L2.76985.0	ARRI Super Clamp (035)	28,00 €
L2.40701.3	Spigot 28 mm, long, with flange & allen screw, fits profile stirrups without sleeve cuff	15,00 €
L2.40701.4	Spigot 28 mm with 16 mm socket, without flange, with screw (for stand operation)	14,00 €
L2.76986.0	Stud 16 mm with thread 3/8" (036-38), plugs into Superclamp (035)	6,00 €

CYC FLOODLIGHT (CONTINUE)

COMPONENTS:

Ident. No.	Description	Price / EURO
L2.76990.0	Safety cable (4 mm) 1 m, with "Kettbiner"	22,00 €
L2.80864.0	Safety cable (5 mm) 1 m, with "Kettbiner"	20,00 €
L2.89210.0	Lamp 1000 W / 230 V R7S-15 P2/7 (Osram)	13,00 €
L2.89211.G	Lamp 1250 W / 230 V R7s-15 P2/12 (GE)	13,00 €
L2.89211.0	Lamp 1250 W / 230 V R7s-15 P2/12 (Osram)	13,00 €

FLUORESCENT

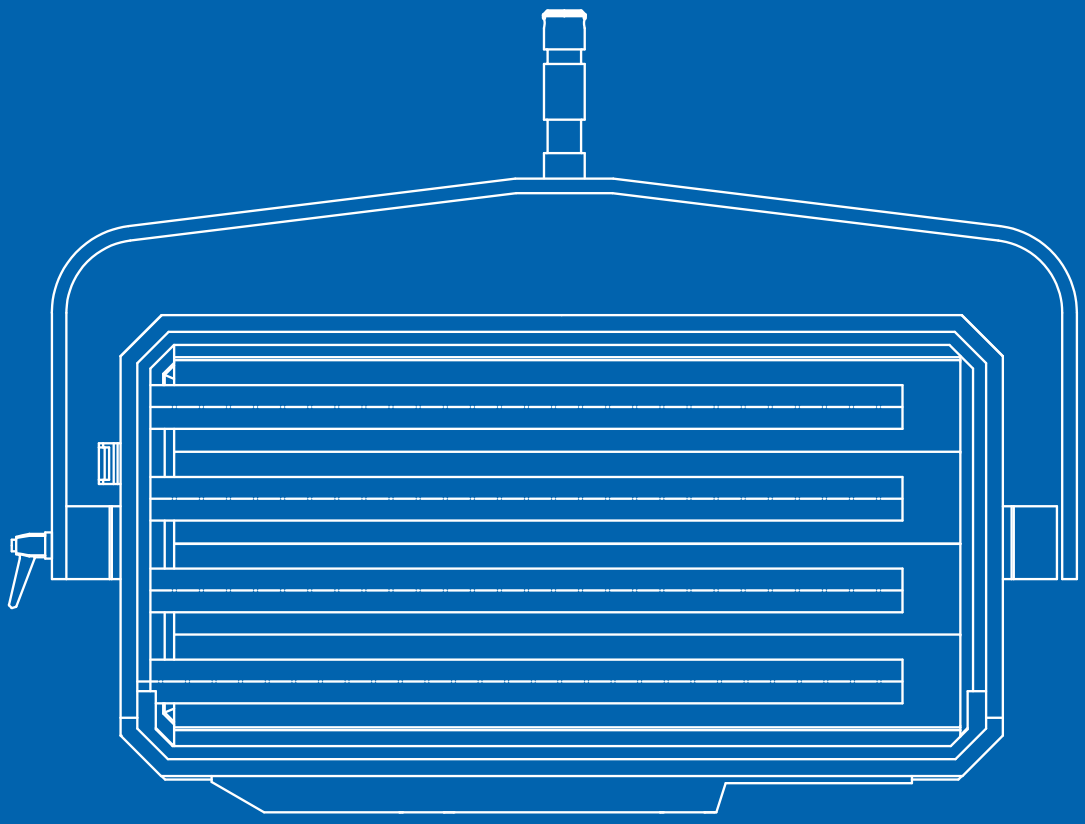



STUDIO COOL 2

Type of Lamphead:	**Flood, 110 W**
Lamp Type:	**TC-L 55 W**
Lamp Base:	**2G11**
Mounting:	**Spigot 28 mm**
Size (HxWxL) /	**309 x 733 x 175 mm /**
Packed Size:	**430 x 765 x 285 mm**
Packed Volume:	**0.09 m³**
Weight / Packed Weight:	**5.2 kg / 7.3 kg**
Protection Class / IP Rating:	**I / IP20**
Certifications:	**CE, CB, GS, cNTRLus**

FLUORESCENCE LAMPHEADS

(cable length 2 m; with multicontrol* panel; without barndoor)

Ident. No.	Description					Price / EURO
L1.84002.B	STUDIO COOL 2 Multicontrol*	MAN	black	220 - 250 V~	Schuko-Plug	1.080,00 €
L1.84002.I	STUDIO COOL 2 Multicontrol*	P.O.	black	220 - 250 V~	Schuko-Plug	1.175,00 €

* Dimmable via DMX, 1 - 10 V or manual

COMPONENTS:

Ident. No.	Description	Price / EURO
L2.84006.0	4-leaf barndoor for STUDIO COOL 2	130,00 €
L2.84007.0	Filter Frame for STUDIO COOL 2	70,00 €
L2.84005.A	Eggcrate, SPS3, silver, flood, red (13 mm / 0.5")	85,00 €
L2.84005.C	Eggcrate, SPH6, silver, medium, blue (15 mm / 0.6")	70,00 €
L2.84005.D	Eggcrate, BTS3, black, narrow, black (13 mm / 0.5")	70,00 €
L2.84175.0	Conversion Kit from STUDIO COOL 2 MAN to P.O. version: stirrup for pole operated pan, tilt and focus	210,00 €
L2.84102.B	Electronic multicontrol module for STUDIO COOL 2 (cable: 2 m)	615,00 €
L2.84080.0	Extension cable 16 A / 230 V~, 2 m, PowerCon blue	40,00 €
L2.84080.B	Extension cable 16 A / 230 V~, 5 m, PowerCon blue	57,00 €
L2.76990.0	Safety cable (4 mm) 1 m, with "Kettbiner"	22,00 €
L2.84019.0	Lamp 55 W / 3200 K 2G11 Studioline Fluorescent Tube (Osram)	30,00 €
L2.84029.0	Lamp 55 W / 5600 K 2G11 Studioline Fluorescent Tube (Osram)	30,00 €

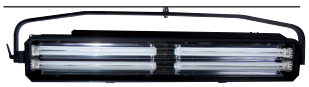

STUDIO COOL 2+2

Type of Lamphead:	**Flood, 220 W**
Lamp Type:	**TC-L 55 W**
Lamp Base:	**2G11**
Mounting:	**Spigot 28 mm**
Size (HxWxL) /	**314 x 1338 x 175 mm /**
Packed Size:	**375 x 285 x 1350 mm**
Packed Volume:	**0.14 m³**
Weight / Packed Weight:	**9.8 kg / 12.8 kg**
Protection Class / IP Rating:	**I / IP20**
Certifications:	**CE, CB, GS, cNTRLus**

FLUORESCENCE LAMPHEADS

(cable length 2 m; with multicontrol* panel; without barndoor)

Ident. No.	Description					Price / EURO
L1.84102.B	STUDIO COOL 2+2 Multicontrol*	MAN	black	220 - 250 V~	Schuko-Plug	1.545,00 €

* Dimmable via DMX, 1 - 10 V or manual

COMPONENTS:

Ident. No.	Description	Price / EURO
L2.84146.0	Filter Frame for STUDIO COOL 2+2	110,00 €
L2.84139.C	Eggcrate, SPH6, silver, medium, blue (15 mm / 0.6")	128,00 €
L2.84139.D	Eggcrate, BTS3, black, narrow, black (13 mm / 0.5")	128,00 €
L2.84070.0	Conversion Kit from STUDIO COOL 4 and 2+2 MAN to P.O. version: stirrup for pole operated pan, tilt and focus	175,00 €
L2.84080.0	Extension cable 16 A / 230 V~, 2 m, PowerCon blue	40,00 €
L2.84080.B	Extension cable 16 A / 230 V~, 5 m, PowerCon blue	57,00 €
L2.76990.0	Safety cable (4 mm) 1 m, with "Kettbiner"	22,00 €
L2.84019.0	Lamp 55 W / 3200 K 2G11 Studioline Fluorescent Tube (Osram)	30,00 €
L2.84029.0	Lamp 55 W / 5600 K 2G11 Studioline Fluorescent Tube (Osram)	30,00 €



STUDIO COOL 4

Type of Lamphead:	**Flood, 220 W**
Lamp Type:	**TC-L 55 W**
Lamp Base:	**2G11**
Mounting:	**Spigot 28 mm**
Size (HxWxL) /	**435 x 733 x 176 mm /**
Packed Size:	**600 x 765 x 285 mm**
Packed Volume:	**0.13 m³**
Weight / Packed Weight:	**7.8 kg / 10.4 kg**
Protection Class / IP Rating:	**I / IP20**
Certifications:	**CE, CB, GS, cNTRLus**

FLUORESCENCE LAMPHEADS

(cable length 2 m; with multicontrol* panel; without barndoor)

Ident. No.	Description					Price / EURO
L1.84004.B	STUDIO COOL 4 Multicontrol*	MAN	black	220 - 250 V~	Schuko-Plug	1.245,00 €
L1.84004.I	STUDIO COOL 4 Multicontrol*	P.O.	black	220 - 250 V~	Schuko-Plug	1.355,00 €

* Dimmable via DMX, 1 - 10 V or manual

COMPONENTS:

Ident. No.	Description	Price / EURO
L2.84066.0	4-leaf barndoor for STUDIO COOL 4	160,00 €
L2.84064.0	Filter Frame for STUDIO COOL 4	74,00 €
L2.84065.A	Eggcrate, SPS3, silver, flood, red (13 mm / 0.5")	115,00 €
L2.84065.C	Eggcrate, SPH6, silver, medium, blue (15 mm / 0.6")	115,00 €
L2.84065.D	Eggcrate, BTS3, black, narrow, black (13 mm / 0.5")	115,00 €
L2.88459.0	3" Mounting baby plate male with swivel pin (LF.8010.A)	34,00 €
L2.84070.0	Conversion Kit from STUDIO COOL 4 and 2+2 MAN to P.O. version: stirrup for pole operated pan, tilt and focus	175,00 €
L2.84080.0	Extension cable 16 A / 230 V~, 2 m, PowerCon blue	40,00 €
L2.84080.B	Extension cable 16 A / 230 V~, 5 m, PowerCon blue	57,00 €
L2.76990.0	Safety cable (4 mm) 1 m, with "Kettbiner"	22,00 €
L2.84019.0	Lamp 55 W / 3200 K 2G11 Studioline Fluorescent Tube (Osram)	30,00 €
L2.84029.0	Lamp 55 W / 5600 K 2G11 Studioline Fluorescent Tube (Osram)	30,00 €

PLA - PROFESSIONAL LIGHTING ACCESSORIES

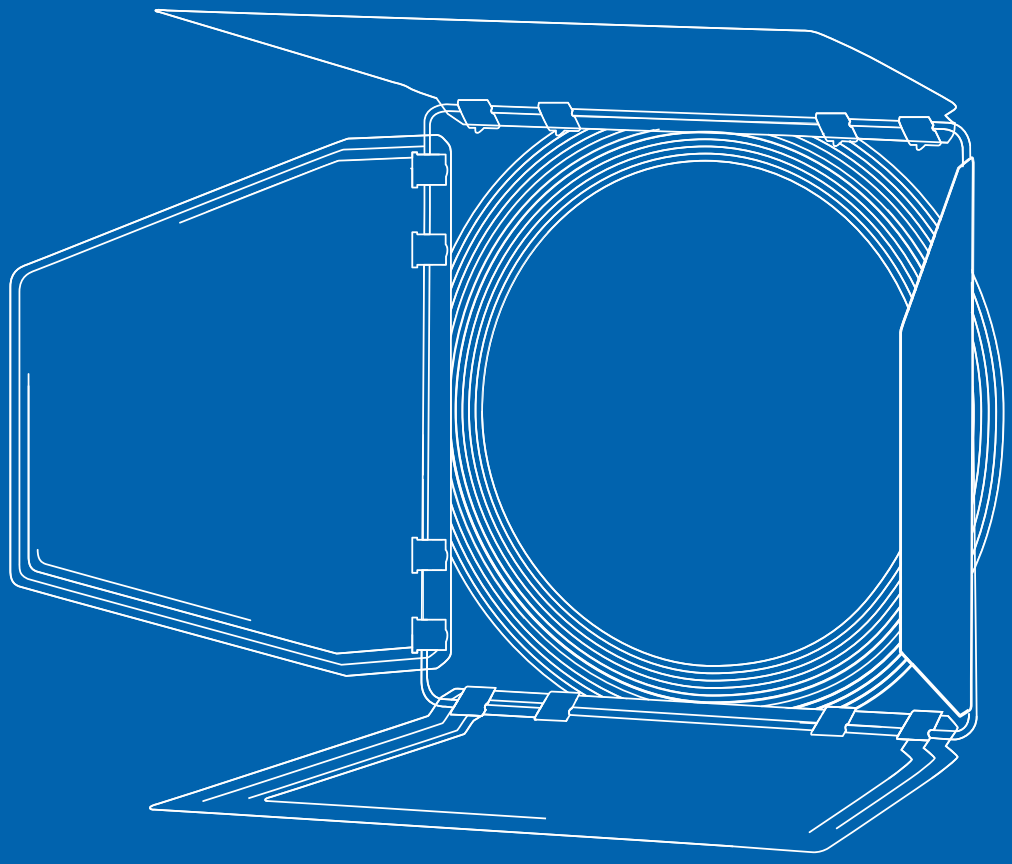

EVENT ACCESSORIES & ADAPTERS





EVENT COMPONENTS

Ident. No.	Description	Price / EURO
L2.75600.F	Head-to-Ballast cable 575/1200/1800 W, 7 m, Schaltbau / Extension Cable EVENT 1200/1800 W	280,00 €
L2.75600.E	Head-to-Ballast cable 575/1200/1800 W, 15 m, Schaltbau / Extension Cable EVENT 1200/1800 W	355,00 €
L2.76318.B	Extension cable EVENT 200/575/1200 W, 5 m, Schaltbau (M1, 4 pole + PE)	105,00 €
L2.76318.C	Extension cable EVENT 200/575/1200 W, 10 m, Schaltbau (M1, 4 pole + PE)	125,00 €
L2.76342.D	Multicore EVENT 575 W, 20 m, Schaltbau (M3, 12 pole + PE)	480,00 €
L2.37714.D	Multicore EVENT 1200/1800 W, 20 m, Harting (HAN 16B, 16 pole + PE)	480,00 €
L2.37705.0	Split Box EVENT 1800, 3 x 1200/1800 W, Harting (HAN 16B, 16 pole + PE)	489,00 €
L2.76341.0	Split Box EVENT Six, 6 x 575 W (6 x 200 W, 3 x 1200 W), Schaltbau (M3, 12 pole + PE)	525,00 €
L2.76785.0	Transmitter pendant module 200	220,00 €
L2.76786.0	Transmitter pendant module 575	220,00 €
L2.76787.0	Transmitter pendant module 1200	220,00 €
L2.76323.0	Adapter for AS2 Event on regular (VEAM) ballasts	110,00 €
L2.76339.0	Adapter for AS5 Event on regular (VEAM) ballasts	140,00 €
L2.76368.0	Adapter for AS12 Event on regular (VEAM) ballasts	175,00 €

CABLES



HEAD-TO-BALLAST CABLES

Ident. No.	Description	Price / EURO
L2.73382.0	Head-to-Ballast cable 125 W, 7 m, Binder	195,00 €
L2.73372.0	Head-to-Ballast cable 200 W, 7 m, Amphenol	200,00 €
L2.70857.0	Head-to-Ballast cable 400 W, 7 m, International connector (VEAM)	290,00 €
L2.75600.0	Head-to-Ballast cable 575/800/1200/1800 W, 7 m, International connector (VEAM)	280,00 €
L2.75600.F	Head-to-Ballast cable 575/1200/1800 W, 7 m, Schaltbau / Extension Cable EVENT 1200/1800 W	280,00 €
L2.75600.C	Head-to-Ballast cable 575/800/1200/1800 W, 15 m, International connector (VEAM)	355,00 €
L2.75600.E	Head-to-Ballast cable 575/1200/1800 W, 15 m, Schaltbau / Extension Cable EVENT 1200/1800 W	355,00 €
L2.75620.0	Head-to-Ballast cable 2500/4000 W, 7 m, International connector (VEAM)	290,00 €
L2.75620.F	Head-to-Ballast cable 2500/4000 W, 7 m, Schaltbau	300,00 €
L2.75620.C	Head-to-Ballast cable 2500/4000 W, 15 m, International connector (VEAM)	390,00 €
L2.75620.E	Head-to-Ballast cable 2500/4000 W, 15 m, Schaltbau	390,00 €
L2.77940.0	Head-to-Ballast cable 6000/9000 W, 7 m, International connector (VEAM)	615,00 €
L2.77940.B	Head-to-Ballast cable 6000/9000 W, 10 m, International connector (VEAM)	750,00 €
L2.77940.A	Head-to-Ballast cable 6000/9000 W, 15 m, International connector (VEAM)	885,00 €
L2.82294.0	Head-to-Ballast/Dimmer cable 12/18/24 kW, 15 m, International connector (VEAM)	970,00 €
L2.82294.A	Head-to-Ballast/Dimmer cable 12/18/24 kW, 20 m, International connector (VEAM)	1.240,00 €

MAINS- & EXTENSION CABLES

Ident. No.	Description	Price / EURO
L2.82297.0	Mains cable 125 A / 230 V, 7 m, International connector (Cannon) / CEE blue)	800,00 €
L2.0001487	Mains cable, 7 m, powerCON TRUE1 / Edison, with line switch	50,00 €
L2.0001486	Mains cable, 3 m, powerCON TRUE1 / Schuko, with line switch	50,00 €
L2.0001485	Mains cable, 1.5 m, powerCON TRUE1 / bare ends	25,00 €
L2.84080.0	Extension cable 16 A / 230 V, 2 m, PowerCon blue	40,00 €
L2.84080.B	Extension cable 16 A / 230 V, 5 m, PowerCon blue	57,00 €

POWER-DMX CABLES

Ident. No.	Description	Price / EURO
L2.30081.0	Power-DMX cable (4-pin XLR), 3 m	60,00 €
L2.30071.0	Power-DMX cable (4-pin XLR), 5 m	70,00 €

BATTERY CABLES

Ident. No.	Description	Price / EURO
L2.30105.0	Battery cable (4-pin XLR), 3 m (with blue marking on cable)	58,00 €

ADAPTER CABLES

Ident. No.	Description	Price / EURO
L2.72082.0	Adapter for lampheads 1200 W with male Schaltbau-connector (German TV) to Ballast with female Cannon-VEAM-Connector (Useable for ARRI-Norm too, but you need additional connection cable L2.75600.A!)	220,00 €
L2.77440.0	Adapter for use of switchable 2500/4000 W-lamphead with male Cannon-VEAM-Connector on CB 2500 with female Cannon-VEAM-Connector (Switchable lampheads like ARRISUN® or X 40/25 are connected internal as 4000 W-lampheads.)	255,00 €
L2.72525.0	Adapter for 4000 W-lamphead with male Schaltbau-connector (German TV) on Ballast with female Cannon-VEAM-Connector (Useable for ARRI-Norm too, but you need additional connection cable L2.75620.A!)	255,00 €

BARNDOORS



2-LEAF BARNDOORS

Ident. No.	Description	Price / EURO
L2.30061.0	2-leaf barndoor, square, Caster-Series	50,00 €

4-LEAF BARNDOORS

Ident. No.	Description	Price / EURO
L2.73380.0	4-leaf barndoor, ARRILUX 125 (78 mm / 3.1")	60,00 €
L2.79380.0	4-leaf barndoor (78 mm / 3.1")	40,00 €
L2.79170.0	4-leaf barndoor (130 mm / 5.1")	45,00 €
L2.79470.0	4-leaf barndoor (168 mm / 6.6")	59,00 €
L2.79471.0	4-leaf barndoor, black/silver (168 mm / 6.6")	115,00 €
L2.39670.0	4-leaf barndoor, True Blue® (197 mm / 7.8")	80,00 €
L2.79670.0	4-leaf barndoor (197 mm / 7.8")	80,00 €
L2.79671.0	4-leaf barndoor, black/silver (197 mm / 7.8")	135,00 €
L2.76522.0	4-leaf barndoor (235 mm / 9.3")	85,00 €
L2.39870.0	4-leaf barndoor, True Blue® (245 mm / 9.7")	90,00 €
L2.40950.0	4-leaf barndoor, True Blue® (344 mm / 13.5")	100,00 €
L2.80950.0	4-leaf barndoor (344 mm / 13.5")	90,00 €
L2.80951.0	4-leaf barndoor, black/silver (344 mm / 13.5")	185,00 €
L2.41200.0	4-leaf barndoor, True Blue® (413 mm / 16.3")	120,00 €
L2.82150.0	4-leaf barndoor (510 mm / 20.1")	410,00 €
L2.74750.0	4-leaf barndoor (530 mm / 20.9")	340,00 €

BARNDOORS (CONTINUE)

4-LEAF BARNDOORS

Ident. No.	Description	Price / EURO
L2.79065.0	4-leaf barndoor (580 mm / 22.8")	540,00 €
L2.37560.0	4-leaf barndoor (584 mm / 23.0")	540,00 €
L2.71100.0	4-leaf barndoor (740 mm / 29.1")	635,00 €
L2.82240.0	4-leaf barndoor, square (247 mm / 9.7") - for ARRI X5	75,00 €
L2.82252.0	4-leaf barndoor, square (338 mm / 13.3") - for ARRI X12 up to SN250	190,00 €
L2.82775.0	4-leaf barndoor, square (342 mm / 13.5") - for ARRI X12 from SN251	180,00 €
L2.82717.0	4-leaf barndoor, square (422 mm / 16.6") - for ARRI X 40/25 from SN 426	235,00 €
L2.82425.0	4-leaf barndoor, square (426 mm / 16.8") - for ARRI X 40/25 up to SN 425	245,00 €
L2.82675.0	4-leaf barndoor, square (518 mm / 20.4") - for ARRI X60	500,00 €
L2.84240.0	4-leaf barndoor for CYC FLOOD	105,00 €
L2.84006.0	4-leaf barndoor for STUDIO COOL 2	130,00 €
L2.84066.0	4-leaf barndoor for STUDIO COOL 4	160,00 €

8-LEAF BARNDOORS

Ident. No.	Description	Price / EURO
L2.79500.0	8-leaf barndoor (168 mm / 6.6")	110,00 €
L2.39700.0	8-leaf barndoor, True Blue® (197 mm / 7.8")	120,00 €
L2.39900.0	8-leaf barndoor, True Blue® (245 mm / 9.7")	150,00 €
L2.40960.0	8-leaf barndoor, True Blue® (344 mm / 13.5")	210,00 €
L2.81210.0	8-leaf barndoor (413 mm / 16.3")	230,00 €

FILTER FRAMES





FILTER FRAMES - CIRCULAR SHAPE

Ident. No.	Description	Price / EURO
L2.79395.0	Filter Frame (78 mm / 3.1")	14,00 €
L2.79190.0	Filter Frame (130 mm / 5.1")	19,00 €
L2.79490.0	Filter Frame (168 mm / 6.6")	20,00 €
L2.79690.0	Filter Frame (197 mm / 7.8")	21,00 €
L2.79890.0	Filter Frame (230 mm / 9.1")	26,00 €
L2.80970.0	Filter Frame (330 mm / 13.0")	38,00 €
L2.81220.0	Filter Frame (400 mm / 15.8")	40,00 €
L2.82155.0	Filter Frame (495 mm / 19.5")	105,00 €
L2.71110.0	Filter Frame (740 mm / 29.1")	170,00 €

FILTER FRAMES - SQUARE SHAPE

Ident. No.	Description	Price / EURO
L2.33817.0	Spill Light Frame (245 mm / 9.7")	30,00 €
L2.34067.0	Spill Light Frame (413 mm / 16.3")	45,00 €
L2.84245.0	Filter Frame for CYC FLOOD	48,00 €
L2.30059.0	Filter Frame for Caster	28,00 €
L2.84064.0	Filter Frame for STUDIO COOL 4	74,00 €
L2.84007.0	Filter Frame for STUDIO COOL 2	70,00 €
L2.84146.0	Filter Frame for STUDIO COOL 2+2	110,00 €

SPILLRINGS, FROSTED GLASSES & SNOOTS



SPILLRINGS

Ident. No.	Description	Price / EURO
L2.37207.0	Spillring (230 mm / 9.1")	60,00 €
L2.37670.0	Spillring (330 mm / 13.0")	75,00 €
L2.37305.0	Spillring (400 mm / 15.8")	100,00 €
L2.37561.0	Spillring (571 mm / 22.5")	120,00 €

FROSTED GLASSES

Ident. No.	Description	Price / EURO
L2.37208.0	Frosted glass (242 mm / 9.5")	95,00 €
L2.0001006	Frosted glass (330 mm / 13.0")	170,00 €

SNOOTS

Ident. No.	Description	Price / EURO
L2.79390.0	Snoot (78 mm / 3.1")	37,00 €
L2.79180.0	Snoot (130 mm / 5.1")	53,00 €
L2.79480.0	Snoot (168 mm / 6.6")	65,00 €
L2.79680.0	Snoot (197 mm / 7.8") with variable aperture	85,00 €
L2.79880.0	Snoot (245 mm / 9.7") with variable aperture	105,00 €
L2.80975.0	Snoot (344 mm / 13.5") with variable aperture	120,00 €
L2.81225.0	Snoot (413 mm / 16.3") with variable aperture	245,00 €
L2.37941.0	Snoot (740 mm / 29.1") with variable frame	715,00 €

ACCESSORY HOLDERS, SPEED RINGS & LIGHTBANKS







ACCESSORY HOLDERS & SPEED RINGS

Ident. No.	Description		Price / EURO
L2.76107.0	Speed ring, outer ring (2415) (157 mm / 6.2")	in connection with L2.76102.0 or L2.70824.0	40,00 €
L2.70837.0	Speed ring, outer ring (2421) (191 mm / 7.5")	in connection with L2.70898.0	45,00 €
L2.70824.0	Speed ring, adapter for ARRILUX 200 with Lighthouse	in connection with L2.76107.0	110,00 €
L2.70898.0	Speed ring, adapter for ARRILUX 400 with Lighthouse	in connection with L2.70837.0	95,00 €
L2.70838.0	Speed ring, complete with adapter, for ARRILUX 200 with Lighthouse	contains adapter & outer ring (L2.70824.0 & L2.76107.0)	110,00 €
L2.70888.0	Speed ring, complete with adapter, for ARRILUX 400 with Lighthouse	contains adapter & outer ring (L2.70898.0 & L2.70837.0)	95,00 €
L2.76102.0	Speed ring, adapter bracket for ARRILUX 125	in connection with L2.76107.0	45,00 €
L2.89070.0	Speed ring circular (9790) (78 mm / 3.1")	fits Video Pro Lightbanks	165,00 €
L2.89067.0	Speed ring circular (9640) (130 mm / 5.1")	fits Video Pro Lightbanks	98,00 €
L2.89068.0	Speed ring circular (9670) (168 mm / 6.6")	fits Video Pro Lightbanks	115,00 €
L2.89074.0	Speed ring circular metal (9670AL) (168 mm / 6.6")	fits Video Pro Lightbanks	150,00 €
L2.89069.0	Speed ring circular (9672) (168 mm / 6.6")	fits Daylite Junior Lightbanks	150,00 €
L2.76246.0	Speed ring circular (9190) (197 mm / 7.8")	fits Video Pro Lightbanks	180,00 €
L2.89060.0	Speed ring circular (9192) (197 mm / 7.8")	fits Daylite Junior Lightbanks	180,00 €
L2.76248.0	Speed ring circular (9205) (245 mm / 9.7")	fits Quartz/Daylite Lightbanks	390,00 €
L2.89061.0	Speed ring circular (9225) (255 mm / 10.0")	fits Quartz/Daylite Lightbanks	360,00 €
L2.76247.0	Speed ring circular (9305) (343 mm / 13.5")	fits Quartz/Daylite Lightbanks	360,00 €
L2.89062.0	Speed ring circular (9365) (411 mm / 16.2")	fits Quartz/Daylite Lightbanks	420,00 €

ACCESSORY HOLDERS, SPEED RINGS & LIGHTBANKS (CONTINUE)

Ident. No.	Description		Price / EURO
L2.89063.0	Speed ring circular (9435) (508 mm / 20.0")	fits Quartz/Daylite Lightbanks	420,00 €
L2.89077.0	Speed ring circular (9445) (530 mm / 20.9")	fits Quartz/Daylite Lightbanks	420,00 €
L2.37475.0	Speed ring circular (9465) (581 mm / 22.9")	fits Quartz/Daylite Lightbanks	400,00 €
L2.89064.0	Speed ring circular (9464) (735 mm / 29.0")	fits Daylite Senior Lightbanks	460,00 €
L2.36780.0	Accessory Holder for ARRILITE 750 Plus		52,00 €

LIGHTBANKS

„Plus“ lightbanks incl. 3 front screens

Ident. No.	Description	Price / EURO
	Video Pro Plus Lightbanks	
L2.76106.0	Chimera Lightbank Video Pro Plus "XXS", incl. 3 front screens (8105) size: 12 x 16" / 30 x 40 cm; depth: 10" / 25 cm	220,00 €
L2.76719.0	Chimera Lightbank Video Pro Plus "XS", incl. 3 front screens (8115) size: 16 x 22" / 40 x 55 cm; depth: 12" / 30 cm	290,00 €
L2.70844.0	Chimera Lightbank Video Pro Plus "S", incl. 3 front screens (8125) size: 24 x 32" / 60 x 80 cm; depth: 18" / 45 cm	360,00 €
L2.70940.0	Chimera Lightbank Video Pro Plus "M", incl. 3 front screens (8135) size: 36 x 48" / 90 x 120 cm; depth: 24" / 60 cm	565,00 €
	Quartz Plus Lightbanks	
L2.89054.0	Chimera Lightbank Quartz Plus "S", incl. 3 front screens (8425) size: 24 x 32" / 60 x 80 cm; depth: 22" / 55 cm	700,00 €
L2.89055.0	Chimera Lightbank Quartz Plus "M", incl. 3 front screens (8435) size: 36 x 48" / 90 x 120 cm; depth: 29" / 75 cm	895,00 €
L2.89056.0	Chimera Lightbank Quartz Plus "L", incl. 3 front screens (8445) size: 54 x 72" / 135 x 180 cm; depth: 38" / 95 cm	1.430,00 €
	Daylite Junior Lightbanks	
L2.89053.0	Chimera Lightbank Daylite Junior Plus "S", incl. 3 front screens (8225) size: 24 x 32" / 60 x 80 cm; depth: 27" / 70 cm	475,00 €
	Daylite Plus Lightbanks	
L2.89058.0	Chimera Lightbank Daylite Plus "M", incl. 3 front screens (8635) size: 36 x 48" / 90 x 120 cm; depth: 40" / 100 cm	1.120,00 €
L2.89059.0	Chimera Lightbank Daylite Plus "L", incl. 3 front screens (8645) size: 54 x 72" / 135 x 180 cm; depth: 48" / 120 cm	1.700,00 €

CONVERSION FILTERS & PROTECTIVE GLASSES



CONVERSION FILTERS

Ident. No.	Description	Price / EURO
L2.73488.0	Conversion Filter 3/4 CTO, 5600 to 3200 K (78 mm / 3.1")	90,00 €
L2.74264.0	Conversion Filter 1/2 CTO, 5600 to 3800 K (78 mm / 3.1")	90,00 €
L2.74266.0	Conversion Filter 1/4 CTO, 5600 to 4500 K (78 mm / 3.1")	90,00 €
L2.74268.0	Conversion Filter 1/8 CTO, 5600 to 4900 K (78 mm / 3.1")	90,00 €
L2.70819.0	Conversion Filter 3/4 CTO, 5600 to 3200 K (112 mm / 4.4")	135,00 €
L2.70846.0	Conversion Filter 3/4 CTO, 5600 to 3200 K (130 mm / 5.1")	140,00 €
L2.76571.0	Dichroic daylight filter (254 mm / 10")	265,00 €
L2.76966.0	Dichroic daylight filter (166 mm / 6.5")	120,00 €
L2.77180.0	ARRI filter pack (Frost F2, Heavy Frost 129, Daylight Blue Frost 224, Daylight 3/4 Blue 201; each 2 x)	35,00 €

PROTECTIVE GLASSES

Ident. No.	Description	Price / EURO
L2.79946.0	IR protective glass (400 mm) between lamphead and shutter	540,00 €
L2.82249.0	UV protective glass, frosted for ARRI X 5	160,00 €
L2.82774.0	UV protective glass, frosted for ARRI X 12 (from SN 251)	245,00 €
L2.82740.0	UV protective glass, frosted for ARRI X 40/25 (from SN 553)	245,00 €
L2.82690.0	UV protective glass, frosted for ARRI X 60	295,00 €
L2.71195.0	UV-protection glass Retrofit for ARRI Daylight 18/12; for the change from fresnel lens to UV-protection glass to get hard shadows	1.100,00 €

LENSES



LENSES FOR ARRILUX

Ident. No.	Description	Price / EURO
	78 mm / 3.1"	
L0.73492.0	ARRILUX 125 lens set (78 mm / 3.1") (narrow flood, flood, super flood, super flood frosted	500,00 €
L2.73402.0	ARRILUX 125 narrow flood lens, black (78 mm / 3.1")	125,00 €
L2.73404.0	ARRILUX 125 flood lens, green (78 mm / 3.1")	125,00 €
L2.73462.0	ARRILUX 125 super flood lens, red (78 mm / 3.1")	125,00 €
L2.73464.0	ARRILUX 125 super flood lens frosted, silver (78 mm / 3.1")	125,00 €
L2.73403.0	ARRILUX 125 empty ring for lenses and CTO's (78 mm / 3.1")	40,00 €
	112 mm / 4.4"	
L0.70830.0	ARRILUX 200 lens set (112 mm / 4.4") (narrow flood, flood, super flood, super flood frosted)	560,00 €
L2.70832.0	ARRILUX 200 narrow flood lens, black (112 mm / 4.4")	140,00 €
L2.70833.0	ARRILUX 200 flood lens, green (112 mm / 4.4")	140,00 €
L2.70834.0	ARRILUX 200 super flood lens, red (112 mm / 4.4")	140,00 €
L2.70835.0	ARRILUX 200 super flood lens frosted, silver (112 mm / 4.4")	140,00 €

LENSES (CONTINUE)

DROP-IN LENSES

Ident. No.	Description	Price / EURO
	130 mm / 5.1"	
L0.77824.0	5 DROP-IN lens set (130 mm / 5.1") (spot, narrow flood, flood, super flood, super flood frosted)	700,00 €
L0.77825.0	4 DROP-IN lens set (130 mm / 5.1") (spot, narrow flood, flood, super flood)	560,00 €
L2.77826.0	DROP-IN lens, spot, blue (130 mm / 5.1")	140,00 €
L2.77828.0	DROP-IN lens, narrow flood, small rectangle, black (130 mm / 5.1")	140,00 €
L2.77830.0	DROP-IN lens, flood, large rectangle, green (130 mm / 5.1")	140,00 €
L2.77832.0	DROP-IN lens, super flood, honeycomb, red (130 mm / 5.1")	140,00 €
L2.77834.0	DROP-IN lens, super flood frosted, honeycomb, silver (130 mm / 5.1")	140,00 €
	175 mm / 6.9"	
L0.77862.0	5 DROP-IN lens set (175 mm / 6.9") (spot, narrow flood, flood, super flood, super flood frosted)	705,00 €
L0.77863.0	4 DROP-IN lens set (175 mm / 6.9") (spot, narrow flood, flood, super flood)	565,00 €
L2.77864.0	DROP-IN lens, spot, blue (175 mm / 6.9")	140,00 €
L2.77866.0	DROP-IN lens, narrow flood, small rectangle, black (175 mm / 6.9")	140,00 €
L2.77868.0	DROP-IN lens, flood, large rectangle, green (175 mm / 6.9")	140,00 €
L2.77870.0	DROP-IN lens, super flood, honeycomb, red (175 mm / 6.9")	145,00 €
L2.77872.0	DROP-IN lens, super flood frosted, honeycomb, silver (175 mm / 6.9")	140,00 €
	250 mm / 9.8"	
L0.76817.0	5 DROP-IN lens set (250 mm / 9.8"), incl. case (spot, narrow flood, flood, super flood, super flood frosted)	1.250,00 €
L0.76818.0	4 DROP-IN lens set (250 mm / 9.8"), incl. case (spot, narrow flood, flood, super flood)	1.060,00 €
L2.76821.0	DROP-IN lens, spot, blue (250 mm / 9.8")	190,00 €
L2.76822.0	DROP-IN lens, narrow flood, small rectangle, black (250 mm / 9.8")	190,00 €
L2.76823.0	DROP-IN lens, flood, large rectangle, green (250 mm / 9.8")	190,00 €
L2.76824.0	DROP-IN lens, super flood, honeycomb, red (250 mm / 9.8")	190,00 €
L2.76825.0	DROP-IN lens, super flood frosted, honeycomb, silver (250 mm / 9.8")	190,00 €
	300 mm / 11.8"	
L0.76864.0	5 DROP-IN lens set (300 mm / 11.8"), incl. case (spot, narrow flood, flood, super flood, super flood frosted)	1.545,00 €
L0.76865.0	4 DROP-IN lens set (300 mm / 11.8"), incl. case (spot, narrow flood, flood, super flood)	1.300,00 €
L2.76867.0	DROP-IN lens, spot, blue (300 mm / 11.8")	245,00 €
L2.76868.0	DROP-IN lens, narrow flood, small rectangle, black (300 mm / 11.8")	245,00 €
L2.76869.0	DROP-IN lens, flood, large rectangle, green (300 mm / 11.8")	245,00 €
L2.76870.0	DROP-IN lens, super flood, honeycomb, red (300 mm / 11.8")	245,00 €
L2.76871.0	DROP-IN lens, super flood frosted, honeycomb, silver (300 mm / 11.8")	245,00 €

DROP-IN LENSES

Ident. No.	Description	Price / EURO
	420 mm / 16.5"	
L0.76882.0	5 DROP-IN lens set (420 mm / 16.5"), incl. case (spot, narrow flood, flood, super flood, super flood frosted)	2.350,00 €
L0.76885.0	4 DROP-IN lens set (420 mm / 16.5"), incl. case (spot, narrow flood, flood, super flood)	1.980,00 €
L2.76887.0	DROP-IN lens, spot, blue (420 mm / 16.5")	370,00 €
L2.76888.0	DROP-IN lens, narrow flood, small rectangle, black (420 mm / 16.5")	370,00 €
L2.76889.0	DROP-IN lens, flood, large rectangle, green (420 mm / 16.5")	370,00 €
L2.76890.0	DROP-IN lens, super flood, honeycomb, red (420 mm / 16.5")	370,00 €
L2.76891.0	DROP-IN lens, super flood frosted, honeycomb, silver (420 mm / 16.5")	370,00 €
	500 mm / 19.7"	
L0.77920.0	5 DROP-IN lens set (500 mm / 19.7"), incl. case (spot, narrow flood, flood, super flood, super flood frosted)	3.840,00 €
L0.77921.0	4 DROP-IN lens set (500 mm / 19.7"), incl. case (spot, narrow flood, flood, super flood)	3.140,00 €
L2.77923.0	DROP-IN lens, spot, blue (500 mm / 19.7")	655,00 €
L2.77926.0	DROP-IN lens, narrow flood, small rectangle, black (500 mm / 19.7")	655,00 €
L2.77924.0	DROP-IN lens, flood, large rectangle, green (500 mm / 19.7")	655,00 €
L2.77925.0	DROP-IN lens, super flood, honeycomb, red (500 mm / 19.7")	655,00 €
L2.77928.0	DROP-IN lens, super flood frosted, honeycomb, silver (500 mm / 19.7")	700,00 €

SCRIMS & SCRIM BAGS

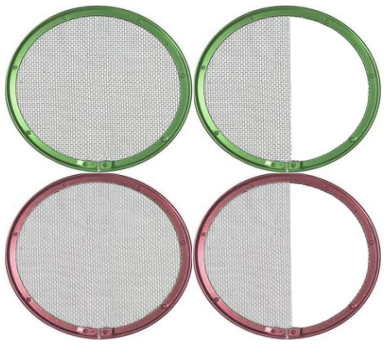

SCRIMS

Ident. No.	Description	Price / EURO
	78 mm / 3.1"	
L2.73466.0	Set of 4 scrims (78 mm / 3.1")	45,00 €
L2.73466.A	Scrim, full single (78 mm / 3.1")	12,00 €
L2.73466.B	Scrim, full double (78 mm / 3.1")	13,00 €
L2.73466.C	Scrim, half single (78 mm / 3.1")	12,00 €
L2.73466.D	Scrim, half double (78 mm / 3.1")	13,00 €
	130 mm / 5.1"	
L2.79160.0	Set of 4 scrims (130 mm / 5.1")	65,00 €
L2.79160.A	Scrim, full single (130 mm / 5.1")	17,00 €
L2.79160.B	Scrim, full double (130 mm / 5.1")	19,00 €
L2.79160.C	Scrim, half single (130 mm / 5.1")	17,00 €
L2.79160.D	Scrim, half double (130 mm / 5.1")	19,00 €
	168 mm / 6.6"	
L2.79460.0	Set of 4 scrims (168 mm / 6.6")	75,00 €
L2.79460.A	Scrim, full single (168 mm / 6.6")	19,00 €
L2.79460.B	Scrim, full double (168 mm / 6.6")	22,00 €
L2.79460.C	Scrim, half single (168 mm / 6.6")	19,00 €
L2.79460.D	Scrim, half double (168 mm / 6.6")	22,00 €

SCRIMS & SCRIM BAGS (CONTINUE)

Ident. No.	Description	Price / EURO
	197 mm / 7.8"	
L2.79660.0	Set of 4 scrims (197 mm / 7.8")	90,00 €
L2.79660.A	Scrim, full single (197 mm / 7.8")	23,00 €
L2.79660.B	Scrim, full double (197 mm / 7.8")	25,00 €
L2.79660.C	Scrim, half single (197 mm / 7.8")	23,00 €
L2.79660.D	Scrim, half double (197 mm / 7.8")	25,00 €
	230 mm / 9.1"	
L2.79860.0	Set of 4 scrims (230 mm / 9.1")	90,00 €
L2.79860.A	Scrim, full single (230 mm / 9.1")	23,00 €
L2.79860.B	Scrim, full double (230 mm / 9.1")	24,00 €
L2.79860.C	Scrim, half single (230 mm / 9.1")	23,00 €
L2.79860.D	Scrim, half double (230 mm / 9.1")	24,00 €
	254 mm / 10.0"	
L2.76950.0	Set of 4 scrims (254 mm / 10.0")	95,00 €
L2.76950.A	Scrim, full single (254 mm / 10.0")	24,00 €
L2.76950.B	Scrim, full double (254 mm / 10.0")	25,00 €
L2.76950.C	Scrim, half single (254 mm / 10.0")	24,00 €
L2.76950.D	Scrim, half double (254 mm / 10.0")	25,00 €
	330 mm / 13.0"	
L2.80980.0	Set of 4 scrims (330 mm / 13.0")	135,00 €
L2.80980.A	Scrim, full single (330 mm / 13.0")	35,00 €
L2.80980.B	Scrim, full double (330 mm / 13.0")	40,00 €
L2.80980.C	Scrim, half single (330 mm / 13.0")	35,00 €
L2.80980.D	Scrim, half double (330 mm / 13.0")	40,00 €
	400 mm / 15.8"	
L2.81230.0	Set of 4 scrims (400 mm / 15.8")	155,00 €
L2.81230.A	Scrim, full single (400 mm / 15.8")	40,00 €
L2.81230.B	Scrim, full double (400 mm / 15.8")	45,00 €
L2.81230.C	Scrim, half single (400 mm / 15.8")	40,00 €
L2.81230.D	Scrim, half double (400 mm / 15.8")	45,00 €
	495 mm / 19.5"	
L2.82160.0	Set of 4 scrims (495 mm / 19.5")	205,00 €
L2.82160.A	Scrim, full single (495 mm / 19.5")	55,00 €
L2.82160.B	Scrim, full double (495 mm / 19.5")	55,00 €
L2.82160.C	Scrim, half single (495 mm / 19.5")	55,00 €
L2.82160.D	Scrim, half double (495 mm / 19.5")	55,00 €

SCRIMS & SCRIM BAGS (CONTINUE)

Ident. No.	Description	Price / EURO
	530 mm / 20.9"	
L2.70634.0	Set of 4 scrims (530 mm / 20.9")	270,00 €
L2.70634.A	Scrim, full single (530 mm / 20.9")	70,00 €
L2.70634.B	Scrim, full double (530 mm / 20.9")	75,00 €
L2.70634.C	Scrim, half single (530 mm / 20.9")	70,00 €
L2.70634.D	Scrim, half double (530 mm / 20.9")	75,00 €
	571 mm / 22.5"	
L2.37563.0	Set of 4 scrims (571 mm / 22.5")	290,00 €
L2.37563.A	Scrim, full single (571 mm / 22.5")	75,00 €
L2.37563.B	Scrim, full double (571 mm / 22.5")	80,00 €
L2.37563.C	Scrim, half single (571 mm / 22.5")	75,00 €
L2.37563.D	Scrim, half double (571 mm / 22.5")	80,00 €
	740 mm / 29.1"	
L2.71115.0	Set of 4 scrims (740 mm / 29.1")	325,00 €
L2.71115.A	Scrim, full single (740 mm / 29.1")	80,00 €
L2.71115.B	Scrim, full double (740 mm / 29.1")	85,00 €
L2.71115.C	Scrim, half single (740 mm / 29.1")	80,00 €
L2.71115.D	Scrim, half double (740 mm / 29.1")	85,00 €

SCRIM BAGS

Ident. No.	Description	Price / EURO
L2.88908.1	Scrim Bag for 78 mm / 3.1" scrims	23,00 €
L2.88911.1	Scrim Bag for 130 mm / 5.1" scrims	25,00 €
L2.88912.1	Scrim Bag for 168 mm / 6.6" scrims	28,00 €
L2.88913.1	Scrim Bag for 197 mm / 7.8" scrims	30,00 €
L2.88914.1	Scrim Bag for 230 mm / 9.1" scrims	35,00 €
L2.88909.1	Scrim Bag for 254 mm / 10.0" scrims	40,00 €
L2.88915.1	Scrim Bag for 330 mm / 13.0" scrims	45,00 €
L2.88916.1	Scrim Bag for 400 mm / 15.8" scrims	50,00 €
L2.88917.1	Scrim Bag for 495 mm / 19.5" scrims	60,00 €
L2.88907.1	Scrim Bag for 530 mm / 20.1" scrims	80,00 €
L2.37563.1	Scrim Bag for 571 mm / 22.5" scrims	90,00 €
L2.89555.1	Scrim Bag for 740 mm / 29.1"scrims	110,00 €

STANDS, WHEELS & OPERATING POLES



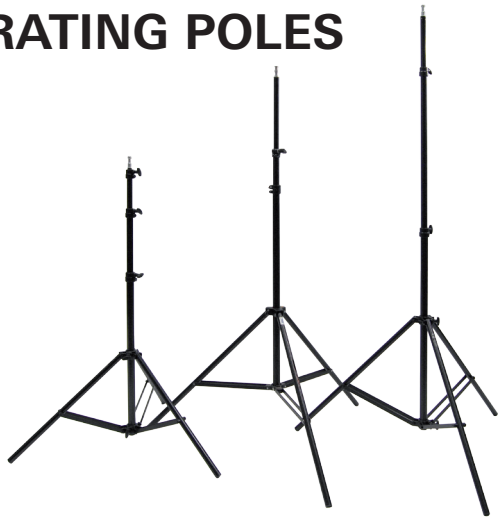

LIGHTWEIGHT STANDS FOR KITS

Ident. No.	Description	Price / EURO
L2.76975.0	Small ARRI Kit Stand LS.1 (050KA) - black aluminium lightweight stand, 2 risers, height 73 - 230 cm, closed 67 cm, spigot 16 mm, max. load 5 kg (fit wheels: 110)	79,00 €
L2.76965.0	Compact ARRI Kit Stand LS.01 (050MKA) - black aluminium lightweight stand, 3 risers, height 90 - 260 cm, closed 76 cm, spigot 16 mm, max. load 5 kg (fit wheels: 110)	82,00 €
L2.76976.0	Medium ARRI Kit Stand LS.2 (050A) - black aluminium lightweight stand, 2 risers, height 110 - 260 cm, closed 88 cm, spigot 16 mm, max. load 5 kg (fit wheels: 110)	76,00 €

LIGHTING STANDS - ALUMINUM

Ident. No.	Description	Price / EURO
L2.88717.0	Universal ARRI Cine Stand LS.4 (007BA) - black aluminium universal stand with levelling leg, 2 risers, height 124 - 315 cm, closed 122 cm, with 16 mm & 28 mm fitting, max. load 12 kg (fit wheels 110)	156,00 €
L2.8803653	Master Stand (1004BAC) - black aluminium stand, 3 risers, height 124…366 cm, closed 107 cm, spigot 16 mm, max. load 9 kg	121,00 €
L2.8803225	Combo Alu Stand (A1035B) - black aluminium stand, 2 risers, height 168 - 350 cm, closed 142 cm, with 16 mm & 28 mm fitting, max. load 30 kg (fit wheels 90000A)	344,00 €

LIGHTING STANDS - STEEL

Ident. No.	Description	Price / EURO
L2.8803224	Combo Steel Stand (A1035CS) - chrome steel stand, 3 risers, height 168 - 350 cm, closed 142 cm, with 16 mm & 28 mm fitting, max. load 40 kg (fit wheels 90000A)	344,00 €
L2.76979.0	Universal ARRI Steel Stand LS.5 (126A) - chrome steel universal stand, 2 risers, height 131 - 333 cm, closed 131 cm, with 16 mm & 28 mm fitting, max. load 40 kg (fit wheels: 110)	198,00 €
L2.8800561	ARRI Wind-up Stand LS.6 (083NWA) - chrome steel universal stand with geared column, wheels with brakes, 1 riser, height 139…247 cm, closed 153 cm, with 16 mm & 28 mm fitting, max. load 45 kg (fit wheels: 104, 251)	565,00 €

WHEELS FOR STANDS

Ident. No.	Description	Price / EURO
L2.88679.0	Wheel set with brakes, Ø 75 mm / 22 mm mount (110)	79,00 €
L2.76959.0	Wheel set with brakes, Ø 75 mm / M10 mount with brakes (104)	70,00 €
L2.88706.0	Wheel set with brakes, Ø 125 mm / M10 mount with brakes (251)	114,00 €
L2.88096.0	Wheel set with brakes, Ø 160 mm / M10 mount with brakes (374)	268,00 €
L2.76980.0	Wheel set with brakes, Ø 125 mm / 25 x 25 mm square mount (90000A)	128,00 €

OPERATING POLES

Ident. No.	Description	Price / EURO
L2.89079.0	Operating pole 4 m (427B-4,0) 4 sections, 3 rises tube diameters: 28, 24, 20, 16 mm, min.: 140 cm, max.: 400 cm	272,00 €
L2.89080.0	Operating pole 6.5 m (427B-6,5) 4 sections, 3 rises tube diameters: 28, 24, 20, 16 mm, min.: 199 cm, max.: 650 cm	343,00 €

GRIP



CLAMPS

Ident. No.	Description	Price / EURO
L2.30992.0	ARRI Swiveling / Noga Arm	110,00 €
L2.76989.0	ARRI Swivelling C Clamp (C150)	119,00 €
L2.76985.0	ARRI Super Clamp (035)	28,00 €
L2.76100.0	ARRI Super Clamp with plate for EB® / EBB	85,00 €
L2.88726.0	ARRI Quick Action Super Clamp - black (635)	43,00 €
L2.88726.S	ARRI Quick Action Super Clamp - silver (635-0350)	41,00 €
L2.73490.0	Universal Clamp with spigot 16 mm (camera mount)	125,00 €

ADAPTERS

Ident. No.	Description	Price / EURO
L2.30088.0	Adapter stud 16 mm + 120 mm for Gobo head mounting	30,00 €
L2.30991.0	Adapter for Hot Shoe, 3/8"	48,00 €
L2.88681.0	Adapter spigot, 1/4" + 3/8", female threads	4,00 €
L2.88639.0	Female Adapter for 16 mm (5/8") spigot with 3/8" stud	12,00 €
L2.88212.0	Double female adapter 16 mm - 17 mm Pin (E400) (LE.4000.A)	14,00 €

SPIGOTS

Ident. No.	Description	Price / EURO
L4240701.3	Spigot 28 mm, long, with flange & allen screw, fits profile stirrups without sleeve cuff	15,00 €
L2.40701.4	Spigot 28 mm with 16 mm socket, without flange, with screw (for stand operation)	14,00 €
L2.76986.0	Stud 16 mm with thread 3/8" (036-38), plugs into Superclamp (035)	6,00 €

GRIP (CONTINUE)

OTHER

Ident. No.	Description	Price / EURO
L2.74144.0	Ballast mount bracket with 16 mm socket	65,00 €
L2.30130.0	Multi Connector joining bracket with stud 16 mm / 5/8 ",for two Casters	56,50 €
L2.88459.0	3" Mounting baby plate male with swivel pin (LF.8010.A)	34,00 €
L2.73408.0	Handgrip, 16 mm spigot size with thread 3/8", light weight	55,00 €

SAFETY CABLES

Ident. No.	Description	Price / EURO
L2.76809.0	Safety cable (3 mm) 0.6 m, with "Kettbiner"	17,00 €
L2.76990.0	Safety cable (4 mm) 1 m, with "Kettbiner"	22,00 €
L2.80864.0	Safety cable (5 mm) 1 m, with "Kettbiner"	20,00 €
L2.80866.0	Safety cable (6 mm) 1 m, with "Kettbiner"	21,00 €

MOTORIZATION

NEW



MOTORIZED YOKE

Ident. No.	Description	Price / EURO
L2.0003613	**Motorized Yoke BigBee** universal motorized yoke, steplessly adjustable, made of heavy duty torsion-resistant aluminum housing, black, inkl. adapters for lighting fixtures Width: for fixtures from 0,30 m (12") to 1,00 m (39") Control: pan (360°) and tilt (180°) via DMX or Licht-Technik control unit; focus via external focus-unit (L2.0003614) Total load: up to 100 kg (220,5 lbs) Mains input: 100 – 240 V~, Max: 100 W Speed: 5°/s (pan/tilt) Memory precision: < 0,3° IP Protection: IP 54	21.900,00 €
L2.0003614	**Motorized Yoke BigBee - Focus Unit** for the steplessly adjustable motorized yoke, black	3.200,00 €
L2.0003975	Case for Motorized Yoke BigBee	1.365,00 €
L2.0003969	M40 adapter for Motorized Yoke BigBee	1.050,00 €
L2.0003968	M90 adapter for Motorized Yoke BigBee	1.050,00 €
L2.0003970	M90 adapter for focus-unit BigBee	290,00 €
L2.0003971	Cable Remote Control for Motorized Yoke BigBee	1.700,00 €
L2.0003976	25m Extension Cable for Cable Remote Control	600,00 €
L2.0003982	40m Extension Cable for Cable Remote Control	825,00 €

ARNOLD & RICHTER CINE TECHNIK GMBH & CO BETRIEBS KG
GENERAL SALE AND DELIVERY TERMS AND CONDITIONS FOR MERCHANTS[1]

1. General; Scope
The terms and conditions delineated herein shall be the sole terms and conditions which apply to all of ARRI's current and future business transactions. Unless ARRI has approved of such in writing, any terms orconditions which conflicts with, deviate from or modify the terms and conditions delineated herein shall not be binding on ARRI irrespective of whether ARRI had prior notice of such terms or conditions. ARRI hereby expressly objects to any such conflicting, deviating or modified terms or conditions.

2. Contract Formation
2.1 Any offers made by ARRI shall be without obligation and subject tochange without notice provided that the parties have not agreed to a lock-up period.
2.2 The customer is bound to its order for a period of four weeks after its receipt by ARRI. A contract is deemed to exist upon the customer's receipt of ARRI's written confirmation regarding the order or the effective delivery of the applicable goods to the customer pursuant to the terms hereof.
2.3 The scope and type of delivery for an order shall be established solely through ARRI's written confirmation relating to such order. Any errors oromissions in ARRI's sales prospectus, pricelists, offer documents or other related documentation may be amended without ARRI incurring any liability for damages or compensation in relation to such errors or omissions.

3. Payment, Set-Off, Withholding
3.1 The purchase price for the contract shall be that price which is specified by ARRI for such contract and shall apply ex works, exclusive of any valueadded tax; if the price is not indicated, the pricelist then in effect shall apply. If the sale has occurred through delivery to a place other than the place of performance (at the customer's request), any costs incurred for packaging, shipping, freight, customs or other related costs will be charged separately. If the customer fails to accept delivery when tendered by ARRI, it must nevertheless make payment.
3.2 In the event that the manufacturing costs for the contracted goods (including, but not limited to, wages, salaries, materials or production costs) rise subsequent to formation of the contract, ARRI shall have the right to increase the purchase price in accordance therewith.
3.3 Invoices from ARRI are due upon ARRI making the goods available to the customer and are payable without deductions within 10 days of the issuance thereof. Upon a default in payment, any overdue amounts will accrue interest at a rate of 8% above the basic interest rate. ARRI reserves its right to assert any further claims regarding damages resulting from a default.
3.4 The customer can offset its payments only if its counterclaim thereto have been judicially sustained or recognized by a declaratory judgment. A right to withholding shall only apply to counterclaims arising specifically from the contract which is the subject of such withholding.

4. Delivery
4.1 The dates for delivery and/or the making available of the goods are not binding unless a date for such has been agreed to in writing by ARRI.
4.2 ARRI is entitled to carry out advance and/or partial deliveries of the goods.
4.3 In the event that ARRI is unable to deliver or make the goods available to the customer due to events of force majeure lasting for a period of three months or more, ARRI's obligation to deliver or make the goods available shall be deemed extinguished in its entirety.
4.4 ARRI shall be entitled to postpone delivery or availability of the goods for the entire duration of the force majeure events.
4.5. Events of force majeure shall be deemed to be any events which are beyond ARRI's control and which make delivery impossible or unreasonably difficult, including, for example, strikes, lawful lockouts, war, import or export prohibitions, scarcity of energy supplies or raw materials, or the delayed delivery to ARRI of goods required for the performance of its obligations hereunder for reasons beyond ARRI's control. If ARRI is released from its obligations as described in Section 4.3 above, the customer shall be entitled to rescind the applicable contract. Compensation for damages for nonperformance can be claimed by the customer only if the default in delivery is due to ARRI's gross ‚negligence or is intentionally caused by ARRI.

5. Transfer of Risk
5.1 The risk of loss or damage to the goods passes to the buyer as soon as ARRI has dispatched the goods from its premises (i.e., plant, factory or warehouse) or upon the surrendering of the goods to the applicable carrier or to the customer itself, as the case may be. The above shall also apply in the event that ARRI serves as the carrier for the goods.
5.2. If the forwarding or collection of the goods is delayed due to reasons attributable to the customer, the risk of loss shall be transferred to the customer upon the readiness of the goods for dispatch.

6. Defective Goods
6.1 The customer must inspect the delivered goods immediately upon its receipt of such. The customer must notify ARRI in writing of any apparent defects within one week of the goods' receipt. ARRI must be notified of hidden defects in writing within two weeks of their emergence but in no event later than one year after delivery of such goods. In the event that the customer fails to meet the aforementioned notification obligations, the goods shall be deemed to have been accepted and the rights set forth in Sections 6.2 and 6.3 below shall not be in effect.
6.2 In the event that the customer has notified ARRI of defects in a timely manner and is thus eligible to make a claim for re-performance, ARRI shall have the right, at its own cost, either to remedy the defect or to redeliver conforming goods.
6.3. If ARRI twice fails to remedy a defect or if ARRI is otherwise unable to accomplish its re-performance obligation or fails to do so within a time period reasonably set forth by the customer, the customer shall be entitled to reduce the purchase price under the contract or to cancel the contract. Instead of seeking performance, the customer can make a claim for damages or for compensation for expenses. However, if the customer elects to rescind the contract it shall have no right to make any claim for damages with respect to the defective goods.
6.4 Provided that ARRI has not acted fraudulently, any claims of the customer regarding the goods shall become void and unenforceable one year after delivery of the applicable goods.
6.5 The prescription period of one year in Section 6.4 above shall be replaced by a prescription period of two years for goods from the product range „Light" of ARRI that are distributed under the brand „ARRI".

7. Liability
7.1 ARRI shall be liable for any damage hereunder caused by it intentionally or caused by its gross negligence.
7.2 In the event of simple negligence by ARRI, ARRI shall be liable only for ordinary and foreseeable damage arising from the contract, and only to the extent that ARRI has breached material contractual obligations. Further, in the event of simple negligence by ARRI, ARRI shall be liable for personal injury and/or health-related damage attributable to ARRI.
7.3 ARRI shall not be liable for consequential damages and unforeseen damages (including consequential damages resulting from defective goods) as well as loss of profits in the event it has acted with simple negligence.
7.4 ARRI shall be subject to no liability beyond that which is delineated in this Section 7.
7.5 To the extent that ARRI's liability is excluded or limited, such exclusion or limitation shall apply to any persons or entities employed by ARRI in the performance of its contractual obligations.
7.6 The limitations of liability delineated herein shall not apply to any legally prescribed strict liability, in particular any such strict liability arising from laws regarding guarantees or product warranties.

8. Retention of Title
8.1 Ownership of the delivered goods shall remain with ARRI until it has received full payment for such goods. Title to the goods shall first pass to the customer upon ARRI's receipt of all payments which are due under the current applicable contract.
8.2 Prior to obtaining title to the goods, the customer is not entitled to pledge, to assign by way of security, to process or to alter the goods. The customer is, however, authorized to sell the goods to third parties in the ordinary course of business unless a non-assignability agreement regarding the consideration exists between the customer and the third party. If a third party acquires an interest in the goods through a resale to such party, the customer agrees to assign to ARRI all of its correlating rights and claims against such third party. ARRI hereby accepts such assignment.
8.3 Any combination, amalgamation and/or processing of the goods (sections 947, 948 and 950 BGB [German Civil Code]) shall be deemed to have been made on behalf of ARRI. ARRI shall acquire title to the resulting product in the ratio of the invoiced value of the goods and services provided by ARRI to the total invoiced value of the resulting product. If the goods have been resold to a third party, the assignment of rights and claims performed in accordance with Section 8.2 above shall be valid solely up to the amount of the invoiced value of goods and services provided by ARRI.
8.4 Upon a default in payment by the customer, ARRI has the right to disclose to any applicable third party that it holds an interest in the goods pursuant to the assignment delineated above and to assert any of its claims directly. The customer is obligated to provide and deliver to ARRI all documentation required for the assertion of such claims. The customer must also make available to ARRI, completely and in a timely fashion, all information about any events that might affect the obligations described above.

9. Jurisdiction; Governing Law
9.1. The parties hereto agree that the exclusive jurisdiction for any transaction and/or contract between the parties is Munich, Germany.
9.2 The relationship of the parties hereto shall be exclusively governed by and in all respects construed in accordance with the laws of the Federal Republic of Germany with no application whatsoever of the United Nations sales law.

[1] Kaufleute as defined in the HGB [German Commercial Code]

Revision: 1st January 2006

Registered Office: Munich
Trade Register: Municipal Court Munich, HRA 57918

General Partner: Arnold & Richter Cine Technik GmbH
Registered Office: Munich
Trade Register: Municipal Court Munich, HRB 54477
Managing Director: Franz Kraus, Dr. Jörg Pohlman, Stephan Schenk, Walter Trauninger
Chairman of the Advisory Board: Prof. Dr. Hans Jörg Bullinger

VAT No: DE 129725260

ARRI SALES DEPARTMENTS

EMEA (Europe, Middle East, Africa, India)

Arnold & Richter Cine Technik
GmbH & Co. Betriebs KG.
Business Unit Lighting & System Group
Ernst-Augustin Str. 12, 12489 Berlin, Germany
Tel: +49 30 678 233 0
Fax: +49 30 678 233 99
sales-lighting@arri.de

ARRI Italia S.r.l.
Viale Edison 318
20099 Sesto San Giovanni (Milano), Italy
Tel: +39 2 262 271 75
Fax: +39 2 242 1692
info@arri.it

AMERICAS

ARRI Inc. / West Coast & Mexico
600 North Victory Blvd.,
Burbank, CA 91502-1639, United States
Tel: +1 818 841 7070
Fax: +1 818 848 4028
info@arri.com

ARRI Inc. / East Coast
617 Route 303
Blauvelt, NY 10913-1109, United States
Tel: +1 845 353 1400
Fax: +1 845 425 1250
info@arri.com

ARRI Inc. / Central & Southern America
2385 Stirling Road
Fort Lauderdale, FL 33312, United States
Tel: +1 954 322 4545
Fax: +1 954 322 4188
info@arri.com

ARRI Canada Limited
1200 Aerowood Drive, Unit 29
Mississauga, Ontario L4W 2S7, Canada
Tel: +1 416 255 3335
Fax: +1 416 255 3399
info@arri.com

ASIA / PACIFIC

ARRI Asia Ltd.
2801-2, Exchange Tower
33 Wang Chiu Road
Kowloon Bay, Hong Kong
Tel: +852 2571 6288
Fax: +852 2875 9181
info@arriasia.hk

ARRI China (Beijing) Co. Ltd.
Chaowai SOHO Tower C
6/F, Suite 0628/0656
Chaowai Dajie Yi 6
100020 Beijing, China
Tel: +86 10 5900 9680
Fax: +86 10 5900 9679
store@arrichina.com

ARRI Australia Pty Ltd
Level 1, Unit 1, 706 Mowbray Road
Lane Cove, NSW 2066
Sydney, Australia
Tel: +61 2 9855 4300
Fax: +61 2 9855 4301
info@arri.com.au



www.arri.com

EN 11/2014 – V1.0

This Lighting Price List 2015 V1.0 (Ident.Nr. L5.85202D8) is published by Arnold & Richter Cine Technik © November/2014
Technical data and offerings are subject to change without notice. All rights reserved. Without any warranty. Not binding, November 2014. ARRI is a registered trademark of Arnold & Richter Cine Technik GmbH & Co. Betriebs KG.